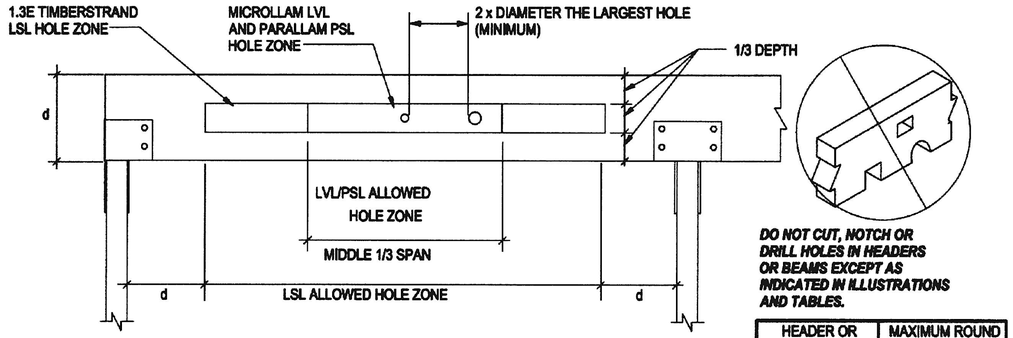

DO NOT CUT, NOTCH OR DRILL HOLES IN HEADERS OR BEAMS EXCEPT AS INDICATED IN ILLUSTRATIONS AND TABLES.

HEADER OR BEAM DEPTH	MAXIMUM ROUND HOLE SIZE
4-3/8"	1"
5-1/2"	1-3/4"
7-1/4" TO 20"	2"

NOTES:
1) ALLOWED HOLE ZONE SUITABLE FOR HEADERS AND BEAMS WITH UNIFORM LOADS ONLY.
2) ROUND HOLES ONLY
3) NO HOLES IN CANTILEVERS.
4) NO HOLES IN HEADERS OR BEAMS IN PLANK ORIENTATION
2) ALLOWABLE PENETRATIONS SUITABLE ONLY FOR WEYERHAEUSER LVL, LSL AND PSL PRODUCTS. CONTRACTOR TO SUPPLY ALLOWABLE PENETRATION CUTSHEET FOR SUBSTITUTIONS

1 / S301 ALLOWABLE PENETRATIONS IN LVL BEAMS
SCALE: 1/2"=1'-0"

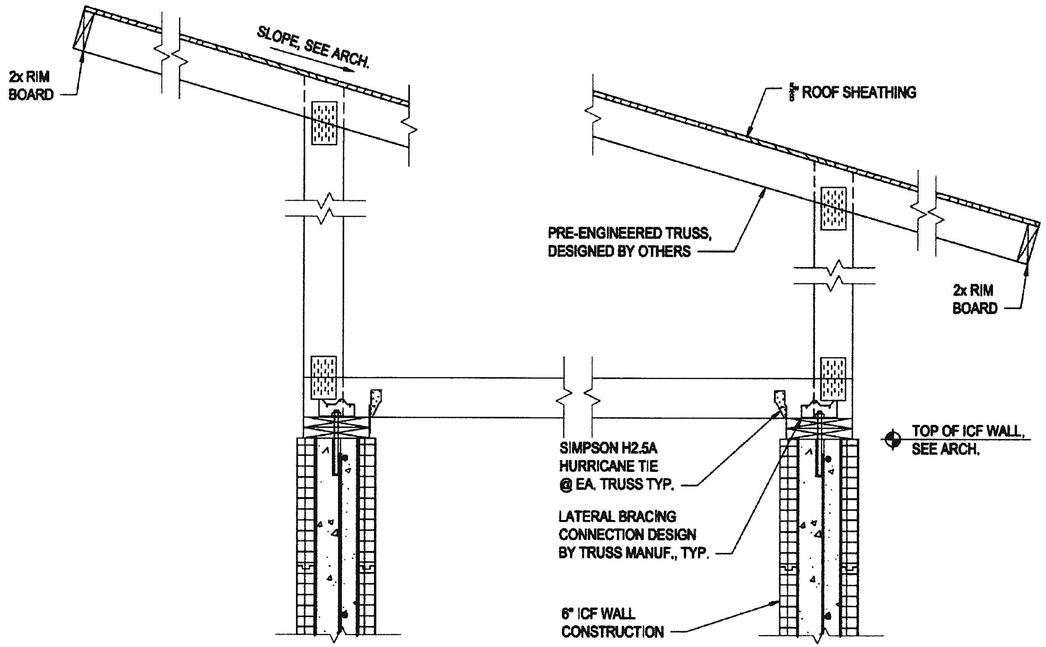

2 / S301 SECTION
SCALE: 1"=1'-0"

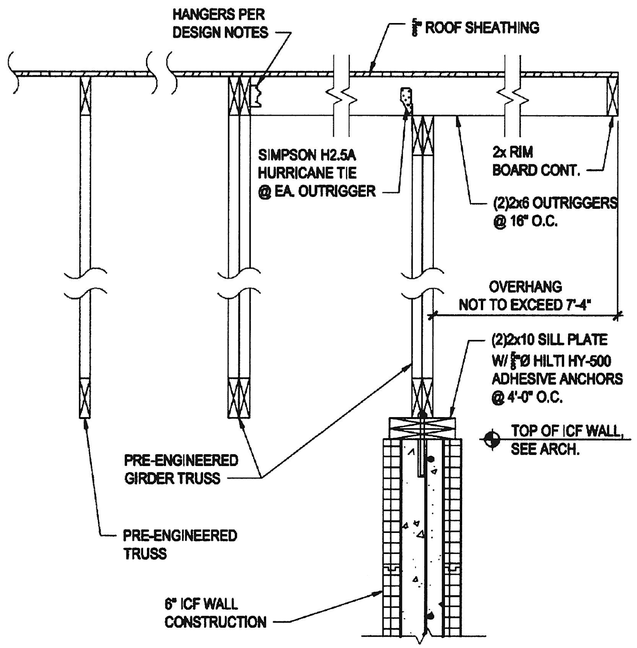

3 / S301 SECTION
SCALE: 1"=1'-0"

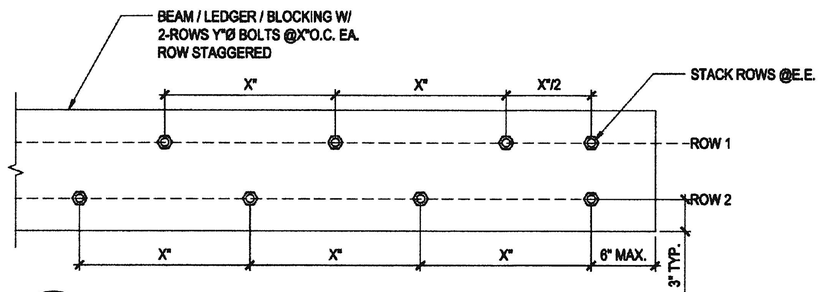

4 / S301 TYP. STAGGERED BOLT SPACING DETAIL
SCALE: 1 1/2"=1'-0"

GNP Inc
AutoCAD
REVIT
Drawings

ICF CONSTRUCTION
1-800-713-7663
MID-ATLANTIC REGION

www.gnphouse.com

RESIDENCE FOR:
THORNE RESIDENCE
21629 Keeney Rd
Parkton, Maryland 21120

Owner

Project Name

General Framing Notes pg1

Project number	2021-572
Date	2-3-2021
Drawn by	Author
Checked by	Checker

S-003

Scale

3/11/2021 8:35:51 AM