ARCHITECTURAL SYMBOLS

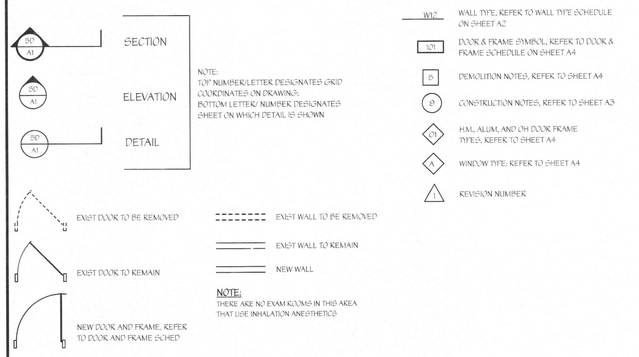

PROJECT INFO

PLEASE REFER TO THE FUNCTIONAL PROGRAM THAT IS PART OF THE PLAN REVIEW APPLICATION THAT IS ATTACHED WITH THESE DRAWINGS.

NOTE; AS INDICATED IN THE FUNCTIONAL PROGRAM THIS CLINIC WILL NOT BE OFFERING SERVICES / PROCEDURES THAT WILL USE GENERAL ANESTHESIA NOR WILL LIFE-SUPPORT EQUIPMENT BE USED DURING ANY SERVICES / PROCEDURES PERFORMED IN THIS CLINIC. THEREFORE, PER 2012 NFPA 101, CHAPTER 20, 20.2.9.2 AN ESSENTIAL ELECTRICAL SYSTEM IS NOT REQUIRED FOR THIS AMBULATORY HEALTH CARE FACILITY AND, ACCORDINGLY, HAS NOT BEEN PROVIDED.

FURTHERMORE, PER 2012 NFPA 99, 4.1 THIS CLINIC HAS BEEN DESIGNATED AS A CATEGORY 3, AS DEFINED IN 4.1.3.

IN ADDITION, ALL OF THE PATIENT CARE EQUIPMENT USED DURING PROCEDURES HAS BEEN PROVIDED WITH AN BOARD BATTERY BACK UP THAT IS CAPABLE OF ALLOWING THE EQUIPMENT TO CONTINUE TO RUN IN THE CASE OF THE LOSS OF POWER FOR A TIME LONG ENOUGH TO ALLOW THE PROCEDURES TO BE STOPPED IN A SAFE AND ORDERLY MANNER SO THAT PATIENT CAN BE MOVED TO A RECOVERY AREA AND/OR EVACUATED FROM THE BUILDING AS MAYBE INDICATED.

EXISTING SITE PLAN SCALE: NTS

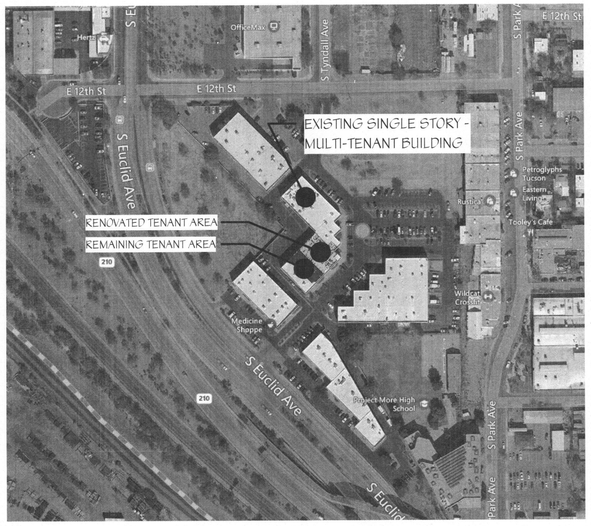

TENANT RENOVATIONS FOR:

Lifeline Access Center

325 S. Euclid Ave, Suite 109
Tucson, AZ 85719

EGRESS PLAN SCALE: 1/8" = 1'-0"

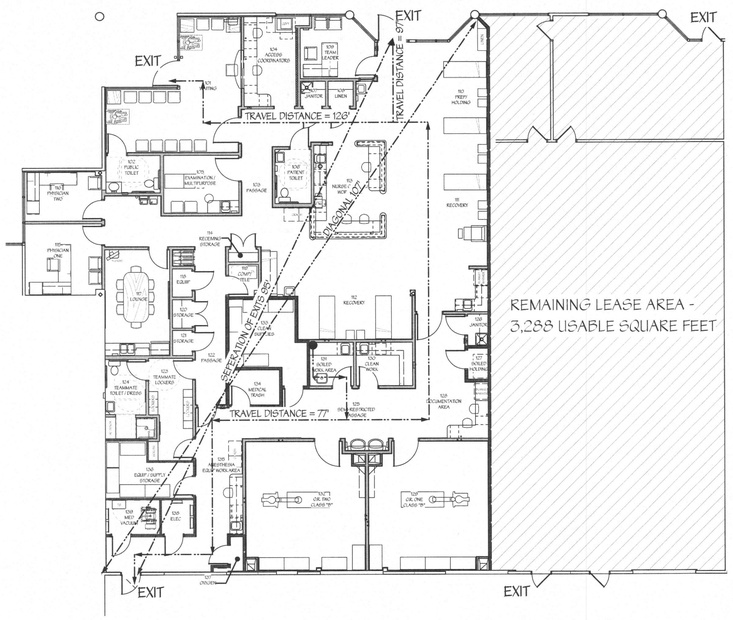

PROJECT INFORMATION

TENANT AREA IS ON THE FIRST (GROUND) FLOOR OF EXISTING SINGLE STORY BUILDING
RENOVATED TENANT AREA - REQUIRED SEPARATION IN SPINKLERED BUILDING = 107/3 OR 36 FEET
MAXIMUM ALLOWABLE TRAVEL DISTANCE = 300'
MAXIMUM ALLOWABLE COMMON PATH OF TRAVEL DISTANCE = 100'

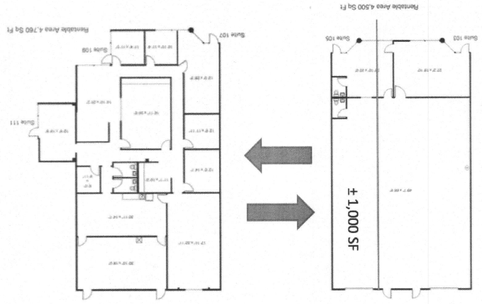

NOTE - THIS SPACE WILL BE CALLED SUITE 109. IT IS A RECONFIGURATION OF EXISTING SUITES 103-105 AND 107-111 AS SHOWN FROM THE SUITE DIAGRAM ABOVE FROM THE LANDLORD.

NOTE: CONTRACTOR AND SUB-CONTRACTORS SHALL VISIT THIS BUILDING AND TENANT AREA AND BE FAMILIAR WITH ALL THE EXISTING CONDITIONS PRIOR TO CONTRACT AWARD

DRAWING INDEX:

T1	TITLE SHEET
A1	FLOOR PLAN & ROOM FINISH SCHEDULE
A2	DIMENSION PLAN AND WALL TYPES / DTLS
A2.1	FIRE DETAILS & WALL DETAILS
A3	NOTED FLOOR PLAN AND CONSTRUCTION NOTES
A4	CEILING & DEMO PLANS, DOOR/FRAME SCHEDULE
A5	INTERIOR ELEVATIONS AND DETAILS
A6	MEDICAL GAS PLAN
M1	FLOOR PLAN-DEMO (HVAC/PIPING)
M2	FLOOR PLAN-NEW WORK (HVAC)
M3	FLOOR PLAN-NEW WORK (EXHAUST)
M4	FLOOR PLAN-NEW WORK (PIPING)
M5	FLOOR PLAN-NEW WORK (PLUMBING)
M6	RISERS
M7	DETAILS
M8	SCHEDULES
M9	MECHANICAL OUTLINE SPECIFICATIONS
M10	ENERGY CALCULATIONS (COM CHECK)
E1	NOTES, SYMBOLS, DETAILS AND SCHEMATIC
E2	FLOOR PLAN - LIGHTING & SCHEDULES & DEMO
E3	FLOOR PLAN - POWER & SCHEDULES
E4	RISER DIAGRAMS AND SCHEDULES
E5	ELECTRICAL SPECIFICATIONS & ENERGY CALCS

ARCHITECTURAL
InSync ARCHITECTURAL DESIGNS, INC.
1213 OLD FALLSVILLE ROAD
WHITEFORD, MARYLAND 21160
410-452-8006 FAX 410-452-8046

MECHANICAL / ELECTRICAL
DON FENN
CONSULTING ENGINEERS
635 WESTPORT PARKWAY, SUITE 30
GRAPEVINE, TEXAS 76051
817-410-2858 FAX 817-251-8411

CODE ANALYSIS

INTERNATIONAL BUILDING CODE, 2012 EDITION (IBC), AS AMENDED BY CITY OF TUCSON
INTERNATIONAL ENERGY CONSERVATION CODE, 2012 EDITION (IECC), AS AMENDED
INTERNATIONAL FIRE CODE, 2012 EDITION (IFC), AS AMENDED
INTERNATIONAL MECHANICAL CODE, 2012 EDITION (IMC), AS AMENDED
INTERNATIONAL PLUMBING CODE, 2012 EDITION (IPC), AS AMENDED
NATIONAL ELECTRIC CODE, 2011 EDITION (NEC), AS AMENDED

	EXISTING BLDG	PROPOSED RENOVATIONS
OCCUPANCY CLASSIFICATION	B - BUSINESS	UNCHANGED
TYPE OF CONSTRUCTION	III-B (UN PROTECTED)	UNCHANGED
NUMBER OF FLOORS	ONE	UNCHANGED
SPRINKLER SYSTEM	YES	YES
EXISTING VACANT TENANT SPACE	8773	
RENOVATED TENANT SPACE		5486
REMAINING TENANT SPACE		3288
OCCUPANT LOAD (B OCCUPANCY CLASSIFICATION @ 100 PER OCCUPANT)		
RENOVATED TENANT SPACE		55
NUMBER OF EXITS REQUIRED		TWO
NUMBER OF EXITS PROVIDED		3
REMAINING TENANT SPACE		33
NUMBER OF EXITS REQUIRED		TWO
NUMBER OF EXITS PROVIDED		2

NOTE:
THIS FACILITY MEETS THE 2012 IBC DEFINITION OF "AMBULATORY CARE FACILITY" IN CHAPTER 2, SECTION 202. PER THE USE AND OCCUPANCY CLASSIFICATIONS IN CHAPTER 3, SECTION 304, AMBULATORY CARE FACILITIES ARE PART OF THE BUSINESS USE GROUP. THIS PROJECT HAS BEEN DESIGNED TO MEET THE SPECIAL DETAILED REQUIREMENTS BASED ON USE AND OCCUPANCY, CHAPTER 4, SECTION 422 AMBULATORY CARE FACILITIES

VICINITY MAP SCALE: NTS

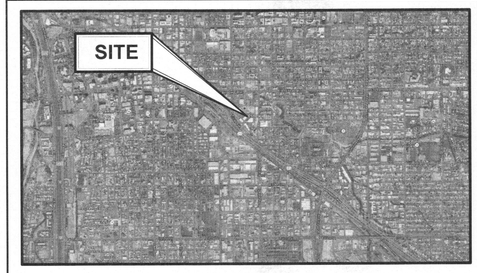

ISSUED FOR ARIZONA
STATE ASC PLAN REVIEW

dpce
don penn ▫ consulting engineer
635 Westport Parkway
Suite 300
Grapevine, Texas 76051
Phone: 817-410-2858
Fax: 817-251-8411

TENANT RENOVATIONS FOR:
LIFELINE
Access Center
325 S. Euclid Ave, Suite 109
Tucson, AZ 85719

Lifeline Vascular Access SM

InSync ARCHITECTURAL DESIGNS, INC.
1215 Old Fallsville Road
Office 410-452-8006
Whiteford, MD 21160
Fax 410-452-8046

REGISTERED ARCHITECT
CERTIFICATE NO. 43180
STEPHANIE FANTI
ARIZONA, U.S.A.

0" 1" 2" 3"
1/8"=1'-0" 8' 16' 24'
1/4"=1'-0" 4' 8' 12'

TITLE SHEET

REVISIONS		
REV#	DATE	DESCRIPTION
#1	6/29/16	PERMIT REVIEW COMMENTS
	1/3/17	ARIZONA STATE ASC PLAN REVIEW

DRAWING NO. T1
SHEET OF
DATE 4/24/16
DRAWN BY BPC
JOB NUMBER 11222
CHECKED BY KDP

A B C D E F G H

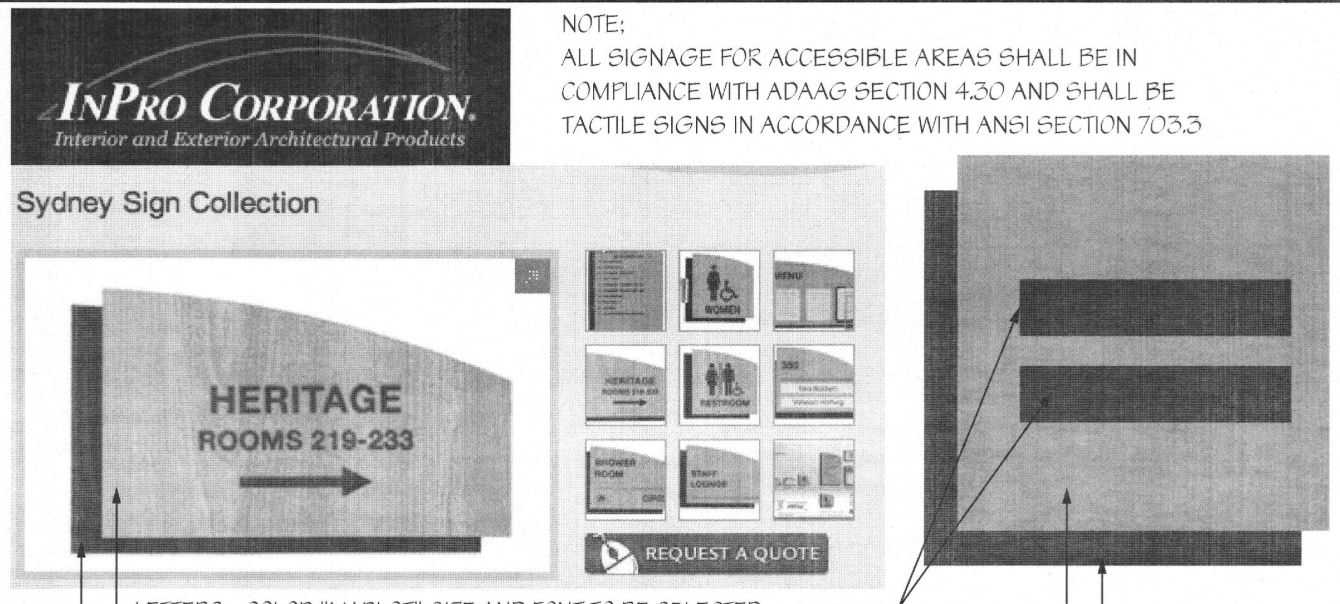

LETTERS - COLOR "MARLOT" SIZE AND FONT TO BE SELECTED
LAM 2 - FACE SIGN COLOR - PHOTOPOLYMER WOOD GRAIN SIGN FACE
LAM4 - BACKGROUND SIGN COLOR - PHOTOPOLYMER WOOD GRAIN SIGN FACE

NOTE;
ALL SIGNAGE FOR ACCESSIBLE AREAS SHALL BE IN COMPLIANCE WITH ADAAG SECTION 4.30 AND SHALL BE TACTILE SIGNS IN ACCORDANCE WITH ANSI SECTION 703.3

(1) ADDITIONAL SIGNS TO BE LOCATED APPROXIMATE WHERE SHOWN ON INTERIOR FINISH PLAN WITH THE FOLLOWING DESIGNATION:

1 PATIENT CARE COORDINATOR

2 NO SMOKING

3 IF THERE IS ANY CHANCE YOU ARE PREGNANT NOTIFY US IMMEDIATELY

4 Same as 3 above but in Spanish

5 PATIENT CARE PLEASE WAIT FOR ESCORT

6 PLEASE FLUSH TOILET AND KEEP ROOM CLEAN AS A COURTESY TO THE OTHER PATIENTS

7 PLEASE FLUSH TOILET AND KEEP ROOM CLEAN AS A COURTESY TO THE OTHER PATIENTS

8 Combined English/Spanish sign reading "Attention If there is any possibility that you may be pregnant, please notify the physician, technologist or registered nurse. Thank You"

9 Combined English/Spanish sign reading "Attention If there is any possibility that you may be pregnant, please notify the physician, technologist or registered nurse. Thank You"

10 AUTHORIZED PERSONNEL ONLY, SCRUBS REQUIRED

11 AUTHORIZED PERSONNEL ONLY, SCRUBS REQUIRED

12 AUTHORIZED PERSONNEL ONLY, SCRUBS REQUIRED

13 Combined English/Spanish sign reading "Attention If there is any possibility that you may be pregnant, please notify the physician, technologist or registered nurse. Thank You"

14 Combined English/Spanish sign reading "Attention If there is any possibility that you may be pregnant, please notify the physician, technologist or registered nurse. Thank You"

PROVIDE THE FOLLOWING SPECIAL SIGNS (TO BE LOCATED BY OWNER);

One - 6"X6"- "PLEASE RING IF DOOR IS LOCKED"

One - 6"X6"- "AMBULANCE ONLY - PLEASE RING. DELIVERIES - PLEASE USE LOBBY DOOR"

Four - Slide-in Window Frame with integral sign below reading "EGRESS PLAN" for Letter Signed Egress Plan

One - 6"x6" sign reading "NURSE CALL SYSTEM, DO NOT UNPLUG"

PROVIDE THE FOLLOWING SPECIAL WARNING SIGNS BY SETON SIGNS (TO BE LOCATED BY OWNER);

Two- "Danger, Oxygen In Use, No Smoking or Open Flame"; Seton Style No 18473.
NOTE - ONE OF THESE SIGNS IS TO BE MOUNTED TO THE DOOR TO THE MEDICAL OXYGEN ROOM, ROOM 137

Two- "Caution, X-Ray Radiation"; Seton Style No 17929.

Two- "Caution, Biological Hazard Authorized Personnel Only"; Seton Style No 18311.

One- "Eyewash Fountain" Seton First Aid Safety Signs Style No. 56005.

Five- "Fire Extinguisher" Seton Style No 37792 (I would really like to find something that looks better than this sign that meets OSHA requirements).

INTERIOR SIGNAGE:

SIGNS BELOW TO BE LOCATED ADJACENT TO DOOR INTO ROOM. COORDINATE EXACT PLACEMENT WITH OWNER.

Room #	SIGNAGE BY DOOR
101	WAITING (located on 103 Passage side)
102	HC TOILET SIGN
103	
104	RECEPTION
105	PATIENT ASSESSMENT / ULTRASOUND ROOM
106	HC TOILET SIGN
107	JANITOR
108	LINEN
109	TEAM LEADER
110	-
111	-
112	-
113	-
114	STORAGE
115	OFFICE
116	OFFICE
117	LOUNGE
118	STORAGE
119	NETWORK
120	STORAGE
121	STORAGE
122	-
123	STAFF LOCKERS (2 REQUIRED)
124	HC TOILET SIGN "STAFF TOILET"
125	-
126	JANITOR
127	SOILED HOLDING
128	-
129	PROCEDURE ROOM ONE
130	CLEAN WORK AREA
131	SOILED WORK AREA
132	PROCEDURE ROOM TWO
133	CLEAN SUPPLIES
134	MEDICAL TRASH
135	-
136	EQUIPMENT STORAGE
137	MEDICAL OXYGEN - NOTE #1
138	ELECTRICAL
139	MEDICAL VACUMN / ELECTRICAL

NOTE #1 - Mount to center of door warning sign Seton Style No 18473.- "Danger, Oxygen In Use, No Smoking or Open Flame". Refer to "SPECIAL WARNING SIGNS" to the left.

TOILET ROOM ACCESSORIES

MARK	DESCRIPTION	MODEL NO *	102 WOMENS TOILET	106 PATIENT TOILET	124 STAFF TOILET
PTD	PAPER TOWEL DISPENSER	B-359	ONE	ONE	ONE
TTD	TOILET TISSUE DISPENSER	B-4288	ONE	ONE	ONE
GB-1	GRAB BAR	B-5806x36	ONE	ONE	ONE
GB-2	GRAB BAR	B-5806x42	ONE	ONE	ONE
GB-3	GRAB BAR - VERTICAL	B-5806x24	ONE	ONE	ONE
MIR	MIRROR (18"X36"H)	B-165-2430	ONE	ONE	ONE
TSC	TOILET SEAT COVER**	B-4221	ONE	ONE	ONE
FND	FEMININE NAPKIN DISPENSER**	B-270	ONE	ONE	ONE
*	MODEL NUMBERS SHOWN ARE BY BOBRICK WASHROOM EQUIPMENT				
**	COORDINATE INSTALLATION LOCATION WITH OWNER				

U.O.N. PROVIDE QUANTITIES OF ACCESSORIES AS NOTED AT EACH TOILET ROOM, SEE TOILET ROOM DETAILS, & SECTIONS FOR MOUNTING LOCATIONS & HEIGHTS, PROVIDE ALL MISC. WALL BLOCKING REQ'D. FOR INSTALLATION.

SEE CONSTRUCTION NOTE #3 FOR ADDITIONAL REQUIRED ITEMS.

ROOM FINISH SCHEDULE:

NOTE: ALL FINISHES SHALL BE IN ACCORDANCE WITH IBC 803.1, CLASS B; FLAME SPREAD 26-75; SMOKE-DEVELOPED 0-450

ALL FLOOR FINISHES SHALL BE SLIP RESISTANT IN ACCORDANCE WITH IBC 1003.2.6

Room #	Scheduled Name	Floor Fin	Base Type	Wall Fin	Ceiling Type	Ceiling Ht	Trim	Special	Notes
101	WAITING	VCT-1	RB-1	PT-1	AC-2	9'-0"	PT-3	-	NOTE #2
102	PUBLIC TOILET	CT-1	CTB-1	CT-2/PT-2	AC-2	8'-0"	PT-3	--	SEE 2B/A5
103	PASSAGE	VCT-1	RB-1	PT-1	AC	9'-0"	PT-3	BULKHEADS; PT-1	NOTE #1
104	ACCESS COORDINATORS	CPT-1	CB-1	PT-1	AC-2	9'-0"	PT-3	--	NOTES #1 & #2
105	CONSULT / ULTRASOUND ROOM	SV-1	SV-1	PT-1	AC	9'-0"	PT-3	--	NOTE #1
106	PATIENT TOILET	SV-1	SV-1	WALL TYPE ONE *	AC	8'-0"	PT-3	--	* 52" HIGH WAINSCOT / USE WR GWB
107	JANITOR	SV-1	SV-1	PT-1	GWB/PT-4	8'-0"	PT-3	--	--
108	LINEN	SV-1	SV-1	PT-1	GWB/PT-4	9'-0"	PT-3	--	--
109	TEAM LEADER	SV-1	SV-1	PT-1	AC	9'-0"	PT-3	--	NOTE #1
110	PREP/HOLDING	SV-1	SV-1	PT-1	AC	9'-0"	PT-3	--	NOTE #1
111	RECOVERY	SV-1	SV-1	PT-1	AC	9'-0"	PT-3	--	NOTES #1 & #2
112	RECOVERY	SV-1	SV-1	PT-1	AC	9'-0"	PT-3	--	NOTES #1 & #2
113	NURSE CONTROL / WORK	SV-1	SV-1	PT-1	AC	8'-0"	PT-3	BULKHEADS; PT-1	--
114	RECEIVING STORAGE	VCT-1	RB-1	PT-1	GWB/PT-4	9'-0"	PT-3	--	--
115	PHYSICIAN ONE	CPT-1	CB-1	PT-1	AC	9'-0"	PT-3	--	NOTE #1
116	PHYSICIAN TWO	CPT-1	CB-1	PT-1	AC	9'-0"	PT-3	--	NOTE #1
117	LOUNGE	VCT-1	RB-1	PT-1	AC	9'-0"	PT-3	--	NOTE #1
118	EQUIPMENT	VCT-1	RB-1	PT-1	GWB/PT-4	9'-0"	PT-3	--	--
119	COMPUTER/TELEPHONE	VCT-1	RB-1	PT-1	AC	9'-0"	PT-3	--	--
120	STORAGE	VCT-1	RB-1	PT-1	GWB/PT-4	9'-0"	PT-3	--	--
121	STORAGE	VCT-1	RB-1	PT-1	GWB/PT-4	9'-0"	PT-3	--	--
122	PASSAGE	VCT-1	RB-1	PT-1	AC	9'-0"	PT-3	--	NOTE #1
123	TEAMMATE LOCKERS	SV-1	SV-1	PT-1	AC	9'-0"	PT-3	--	NOTE #1
124	TEAMMATE TOILET	SV-1	SV-1	WALL TYPE ONE *	AC	9'-0"	PT-3	GWP/PT-4 CLG AT SHOWER	* 52" HIGH WAINSCOT / USE WR GWB
125	SEMI-RESTRICTED PASSAGE	SV-1	SV-1	PT-1	AC-1	9'-0"	PT-3	--	NOTE #1
126	JANITOR	SV-1	SV-1	PT-1	GWB/PT-4	9'-0"	PT-3	--	--
127	SOILED HOLDING	SV-1	SV-1	PT-1	GWB/PT-4	9'-0"	PT-3	--	--
128	DOCUMENTATION AREA	SV-1	SV-1	PT-1	AC-1	9'-0"	PT-3	--	NOTE #1
129	PROCEDURE ROOM ONE	SSV-1	SSV-1	PT-1*	GWB/PT-4	9'-0"	PT-3	--	*SCRUBBABLE WALL FIN
130	CLEAN WORK	SV-1	SV-1	PT-1	AC-1	9'-0"	PT-3	--	--
131	SOILED WORK AREA	SV-1	SV-1	PT-1	AC	9'-0"	PT-3	--	--
132	PROCEDURE ROOM TWO	SSV-1	SSV-1	PT-1*	GWB/PT-4	9'-0"	PT-3	--	*SCRUBBABLE WALL FIN
133	CLEAN SUPPLIES	SV-1	SV-1	PT-1	AC-1	9'-0"	PT-3	--	--
134	MEDICAL TRASH	SV-1	SV-1	PT-1	GWB/PT-4	9'-0"	PT-3	--	--
135	NESTHESIA EQUIPMENT WORK AR	SV-1	SV-1	PT-1	AC-1	9'-0"	PT-3	--	NOTE #1
136	EQUIPMENT / SUPPLY STORAGE	SV-1	SV-1	PT-1	AC-1	9'-0"	PT-3	--	--
137	OXYGEN	SV-1	SV-1	PT-1	GWB/PT-4*	9'-0"	PT-3	--	* REFER TO 9A/A2
138	ELECTRICAL	SV-1	SV-1	PT-1	AC	9'-0"	PT-3	--	--
139	MED VACUUM / ELECTRICAL	SV-1	SV-1	PT-1	AC-1	9'-0"	PT-3	--	--

GENERAL NOTE;
ALL FLOOR SLAB AREAS THAT ARE SCHEDULED TO RECEIVE ANY KIND OF SHEET VINYL FLOOR ARE TO BE TREATED WITH A MOISTURE VAPOR REDUCTION (FOLLOWING ALL CONCRETE POUR BACKS OF FLOOR TRENCHES FOR PLUMBING) SYSTEM EQUAL TO KOSTER WATERPROOFING SYSTEMS MOISTURE VAPOR REDUCTION SYSTEM. PROVIDE A MIN 10 YEAR WARRANTY.

WALL PAINT - PT-2 ABOVE WAINSOT
CAP TRIM FOR FRP
WALL PROTECTION WP-1 WAINSCOT ON ALL WALLS
4'-4" TYP
FIN FLOOR
CONT BEAD OF CLEAR SILICONE SEALANT
BASE
WALL FINISH TYPE ONE

NOTE #1;
REFER TO FLOOR PLAN FOR FEATURE WALL LOCATIONS (CONSTRUCTION NOTES #37)
NOTE #2;
REFER TO FLOOR PLAN FOR BULKEAD LOCATIONS AND FINISHES FOR ALL SIDES. GYP BOARD CEILINGS AT BULKHEADS TO BE PAINTED "PT-4"

ROOM FINISH MATERIALS:

FLOOR FINISH:
CPT-1 = CARPETING
CPT-1 SHAW TRIBUTE 60710 TRADITIONAL SLATE 10150 WITH
CB-1 - 4" HIGH MATCHING CARPET BASE

SV-1 = SHEET VINYL - MEET CODE REQUIRED "COMMERCIAL GRADE"
SV-1 ARMSTRONG CONNECTIONS CORLON COLOR : "DESERT SAND" (88703) (WITH HEAT WELDED SEAMS)

SSV-1 = SEAMLESS/WELDED SEAM SHEET VINYL
SSV-1 ARMSTRONG MEDINTECH COLOR : "FREESIA PEARL" (88485) (W/ MATCHING ARMSTRONG WELD BEAD) 6" HIGH INTEGRAL BASE

NOTE - PROVIDE AN ADD ALTERNATE FOR PROVIING A MOISTURE SEALCOAT TO THE SLAB AREAS WHERE SV-1 AND SSV-1 ARE TO BE INSTALLED TO PROTECT FROM FUTURE MOISTURE ISSUES.

VCT-1 = VINYL COMPOSITION TILE FLOORING
VCT-1 AMTICO INTERNATIONAL SPACIA EMBER OAK SW 2512 WITH RB-1 - ROPPE RUBBER BASE

CT-1 = CERAMIC FLOOR TILE
CT-1 FLOOR TILE - DALTILE P504 - GUNMETAL - 13"x13" WITH MATCHING 6"X13" COVE BASE TILE LIGHT GREY MORTAR SELECTED BY ARCHITECT

BASE TYPE:
CB-1 = 4" HIGH CARPET BASE MATCHING CARPET

CTB-1 = MATCHING 6"X13" COVE BASE TILE

SV-1 = 4" HIGH SHEET VINYL-INTRIGUAL COVE BASE WITH 3/4" RADIUS COVE AND CONTINUOUS ALIMINUM CAP.

SSV-1 = SEAMLESS/WELDED SEAM SHEET VINYL- INTRIGUAL COVE 6" HIGH WITH 3/4" RADIUS COVE AND CONTINUOUS ALIMINUM CAP.

RB-1 = RUBBER COVE - Roppe TP 7P122 1/8" RB-1 - ROPPE RUBBER BASE PINNACLE 700 SERIES - 110 BROWN

WALL FINISH:
PT-1 = PAINTED WALLS
PT-1 DUNN EDWARDS DE6199 PALE BEACH IN AN EGG SHELL FINISH
PT-2 = PAINTED WALLS - FEATURE WALLS (CONSTRUCTION NOTE #37)
PT-2 DUNN EDWARDS DE6332 GLEN FALLS IN AN EGG SHELL FINISH
PT-3 = PAINTED TRIM - DOOR FRAMES
PT-3 DUNN EDWARDS DEA187 BLACK IN A SEMI-GLOSS FINISH
CT-2 = CERAMIC WALL TILE
CT-2 WALL TILE - DALTILE MY64 - METRO TAUPE - 8"x20" WITH MATCHING 4"H CEMENT BULLNOSE DARK BROWN MORTAR SELECTED BY ARCHITECT
ST-1 = FEATURE WALL - STONE WALL
ST-1 NORTON STONE ROCK PANEL OCHRE BLEND

NOTE: ALL INTERIOR SPECIALTY FINISH ITEMS SHALL BE IN ACCORDANCE WITH IBC 805

CEILING TYPE:
AC = TYPICAL ACCOUSTICAL TILE (2'X4')
AC-1 = SCRUBBABLE ACCOUSTICAL TILE (2'X4') INSTALLED WITH HOLD DOWN CLIPS
AC-2 = ACCOUSTICAL TILE - TEGULAR EDGE (2'X2')
GWB/PT = GYPSUM WALL BOARD / PAINTED
PT-4 = SHERWIN WILLIAMS – CEILING WHITE - FLAT

PLASTIC LAMINATE:
PROVIDE THE FOLLOWING LAMINATE COLORS PER THE INT. ELEVATIONS;
PLAS LAM "PL-1" - CABINETS
PL-1 PIONITE HP 360 AFTERNOON SHOWERS
PLAS LAM "PL-2" - COUNTERTOPS
PL-2 WILSON ART 4846-60 MORRO ZEPHYR

FEATURE COUNTERTOPS:
GRANITE COUNTERTOP "ST-2"
ST-2 CRYSTAL BEACH CACTUS STONE SLAB GRANITE
SOLID SURFACE COUNTER "CT-3"
CT-3 BATHROOM COUNTER - CORIAN - SONORA

DOORS
"NAT" - WOOD DOORS TO BE STAINED - STAIN GRADE - ROTARY NATURAL BIRCH DOORS. COLOR TO MATCH VCT-1 SPACIA EMBER OAK #SW 2512

DOOR HARDWARE
DOOR HARDWARE TO BE FINISHED US26D - SATIN CHORME

PLUMBING FIXTURE TRIM
WITH THE EXCEPTION OF THE PUBLIC TOILET, ALL PLUMBING FIXTURES WILL BE WHITE WITH CHORME FINISH.

SPECIALTY ITEMS
ROLLER SHADES - EQUAL TO TECHMATIC WINDOW SHADES. FABRIC TO BE SHEERWEAVE FW 3500 "LINEN" WITH 5% OPENNESS. OPERATOR TO BE STAINLESS STEEL OPERATOR LOCATED ON THE NON-OBSTRUCTED SIDE OF OPENING. PROVIDE ALL HARDWARE REQUIRED FOR A COMPLETE INSTALLATION INCLUDING FACIAS WITH ENDCAPS. FASCIA TO BE CLEAR ANODIZED.

CORNER GUARDS - INPRO COLOR "SAND DUNE" 0278.
DOOR GUARD - INPRO COLOR ""SAND DUNE" 0278.

WALL PROTECTION / FRP -
WP-1 = INPRO WALL PANEL ELEMENTS - 5E019
WP-2 = MARLITE FRP "SILVER" P145

CUBICAL CURTAIN FABRIC - FROM 100% FR POLYESTER CUBICLE FABRIC, INPRO PATIO MOCHA FROM THE SILVER SERIES, HIDDEN MESH, CURTAIN STYLE 1

ELECTRICAL DEVICES - WHITE WITH STAINLESS STEEL COVER PLATES - TYPICAL THROUGHOUT

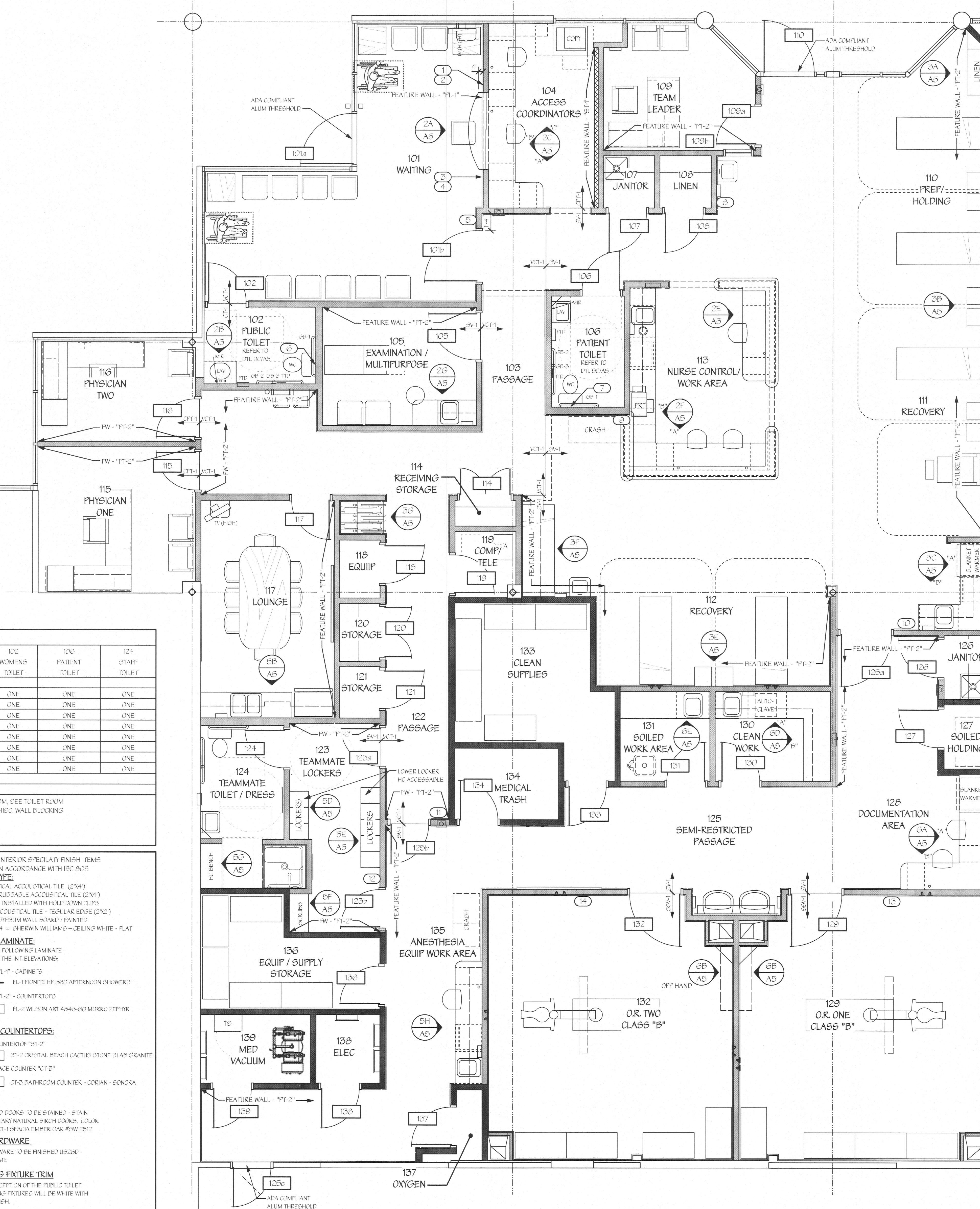

9F / A1 FLOOR PLAN
Scale: 1/4" = 1'-0"
REFER TO SHEET A2 FOR DIMENSIONAL PLAN
REFER TO SHEET A3 FOR CONSTRUCTION NOTES
REFER TO SHEET A4 FOR DEMOLITION PLAN
REFER TO SHEET A4 FOR DOOR SCHEDULE
REFER TO SHEET A4 FOR CEILING PLAN
REFER TO SHEET A5 FOR TOILET ROOM ACCESSORIES SCHEDULE

GENERAL NOTES:
ALL UNDER FLOOR PLUMBING ROUGH-INS, DEMOLITION AND OTHER LOUD WORK SHALL BE DONE DURING OFF-HOURS AND CAREFULLY COORDINATED WITH LANDLORD TO INSURE MINIMAL DISRUPTION TO ADJACENT SPACES.

OWNER WILL PROVIDE INTERIOR SIGNAGE TO BE MOUNTED BY THE CONTRACTOR. COORDINATE WITH OWNER.

REFER TO CONSTRUCTION NOTES FOR NEW FIRE EXTINGUISHERS. A MINIMUM OF FOUR FIRE EXTINGUISHERS ARE TO BE PROVIDED. CONTRACTOR TO REVIEW LOCATIONS WITH CODE OFFICIAL TO INSURE PLACEMENT OF THESE UNITS MEETS CODE REQUIREMENTS. CONTRACTOR SHALL PROVIDE ADDITIONAL FIRE EXTINGUISHERS AS MAY BE DETERMINED BY THIS REVIEW.

ALL ACCESSIBLE CONTROLS, OPERATING MECHANISMS AND HARDWARE SHALL COMPLY WITH SECTION 309 OF ICC/ANSI A117.1.

NOTE; CONTRACTOR AND SUB-CONTRACTORS SHALL VISIT THIS BUILDING AND TENANT AREA AND BE FAMILIAR WITH ALL THE EXISTING CONDITIONS PRIOR TO CONTRACT AWARD

0" 1" 2" 3"
1/8"=1'-0" 8' 16' 24'
1/4"=1'-0" 4' 8' 12'

ISSUED FOR ARIZONA STATE ASC PLAN REVIEW

dpce
635 Westport Parkway
Suite 300
Grapevine, Texas 76051
Phone: 817-410-2858
Fax: 817-251-8411
don penn consulting engineer

TENANT RENOVATIONS FOR:
LIFELINE
Access Center
325 S. Euclid Ave, Suite 109
Tucson, AZ 85719

Lifeline Vascular Access

InSync Architectural Designs, Inc.
1213 Old Fyleeville Road
Office 410-452-8006
Whiteford, MD 21160
Fax 410-452-8046

REGISTERED ARCHITECT CERTIFICATE NO. 43189 STEPHANIE FANTL DATE SIGNED ARIZONA U.S.A. 1/9/17

FLOOR PLAN & ROOM FINISH SCHEDULE

REVISIONS		
REV#	DATE	DESCRIPTION
#1	6/29/16	PERMIT REVIEW COMMENTS
	1/6/17	ARIZONA STATE ASC PLAN REVIEW

DRAWING NO. A1
SHEET OF
DATE 4/13/16 DRAWN BY BFC
JOB NUMBER 11222 CHECKED BY KDF

A B C D E F G H
1 2 3 4 5 6 7 8 9

WALL TYPES:

GENERAL NOTES:

1. UNLESS OTHERWISE NOTED, ALL WALL STUDS AND GWB SHALL EXTEND MIN 6" ABOVE FINISHED CEILING AND BE BRACED TO STRUCT ABV @ 45° O.C. REFER TO DETAIL 2D/A5

2. ARTICLED FINISHES ARE SHOWN ON THE FINISH SCHEDULE.

3. PROVIDE NON COMBUSTIBLE BLOCKING IN WALL AS REQ'D TO INSTALL CASEWORK AND WALL MOUNTED ACCESSORIES.

4. LEAD SHIELDING (WHERE INDICATED) SHALL BE INSTALLED BEHIND GYP BOARD FOR A MINIMUM HEIGHT OF 7'-0" AFF. WALL LEAD SHALL BE TIED TO LEAD AT ADJACENT WALLS AND SHALL BE INSTALLED BEHIND ANY PENETRATIONS, SUCH AS ELECTRICAL JUNCTION BOXES, TO MAINTAIN A CONTINUOUS BARRIER OF LEAD PROTECTION IN THE THICKNESS INDICATED.

5. INSULATION MATERIALS SHALL COMPLY WITH CODE REQUIREMENTS - FLAME SPREAD NO MORE THAN 25 AND SMOKE-DEVELOPED INDEX NO MORE THAN 450

W12 S
7'-2"
1 HR

WALL TYPE
SUFFIX REFERENCE
SPECIAL WALL HEIGHT
HOURS FIRE RATING
LEAD LINED WALL

SUFFIX REFERENCE NOTES:

SUFFIX REFERENCE NOTES IDENTIFY ADDITIONAL REQUIREMENTS FOR THE CONSTRUCTION OF WALL TYPES AT THE LOCATIONS INDICATED ON THE PLANS AS NOTED BELOW.

SUFFIX	REFERENCE
-	EXCLUDE GYP BD ON UNEXPOSED SIDE OF STUD WALL TYPE.
M	MATCH EXISTING WALL THICKNESS
S	PROVIDE 3" (OR EQUAL TO STUD DEPTH IF STUD IS LESS THAN 3") SOUND BATTS (SOUND ATTENUATION BLANKETS) TO FILL WALL CAVITY AND TO EXTEND THE FULL HEIGHT OF THE WALL.
U	EXTEND FIRE WALLS AND SMOKE PARTITION WALLS TO UNDERSIDE OF DECK ABOVE.
IS	PROVIDE BATT INSULATION IN THICKNESS EQUAL TO STUD DEPTH. NOTE - INSTALL 4" BATTS AT ALL EXTERIOR WALLS
K	R2.1 INSULATION IN THICKNESS EQUAL TO FURRING DEPTH.
W	MOLD / MOISTURE RESISTANT GYPSUM WALL BOARD TO EXTEND FULL HEIGHT ON "WET" SIDE OF WALL. (SEE GENERAL NOTE #5) ALSO
FW	FIRE RATED WALL
FP	FIRE RATED PARTITION
SP	SMOKE PARTITION (SEE PLAN FOR APPLICABLE FIRE RATING)

W09 — W09 S — 2 1/2" — 1 1/2" MTL FURRING @ 16" OC — 5/8" GYPSUM WALL BOARD

W12 — 4 7/8" — 3-5/8" MTL STUDS @ 16" OC — 5/8" GYPSUM WALL BOARD

W15 — 4 7/8" — 3-5/8" MTL STUDS @ 16" OC — 5/8" FIRE RATED GWB — 1 HR - IBC 2012 TABLE 721(2) ITEM NUMBER 13-1.1 — REFER TO DETAIL 9C/A2

W18 — 4 7/8" — 3-5/8" MTL STUDS @ 16" OC — 5/8" GYPSUM WALL BOARD — 5/8" GWB W/ 1/16" LEAD BACKING

W19 — W19 — 4 7/8" — 3-5/8" MTL STUDS @ 16" OC — 5/8" FIRE RATED GWB — 1 HR - IBC 2012 TABLE 721(2) ITEM NUMBER 13-1.1 — PROCEDURE ROOM SIDE II — REFER TO DETAIL 9C/A2

W22 — 7 1/4" — 6" MTL STUDS @ 16" OC — 5/8" GYP WALL BD ABOVE 4' AFF — 5/8" MOLD/MOISTURE RESISTANT GYP WALL BD BELOW 4' AFF — W/ 1/16" LEAD BACKING

W25 — 7 1/4" — 6" MTL STUDS @ 16" OC — 5/8" FIRE RATED GWB ABOVE 4' AFF — 5/8" FIRE RATED - MOLD/MOISTURE RESISTANT GWB BELOW 4' AFF — 1 HR - IBC 2012 TABLE 721(2) ITEM NUMBER 13-1.1 — REFER TO DETAIL 9C/A2

CONCEALED PARTITION MARKINGS:

ONE HOUR FIRE WALLS — W15 FW — SEE DIMENSIONAL PLAN - SUFFIX DESIGNATION "FW"

PAINT IN 2" HIGH "RED" LETTERING THE FOLLOWING "ONE HOUR FIRE WALL". SIGNAGE TO BE LOCATED ABOVE CEILING AT A MAXIMUM SPACING OF 5' HORIZONTALLY ON BOTH SIDES OF WALL (EVEN NON - TENANT SIDE)

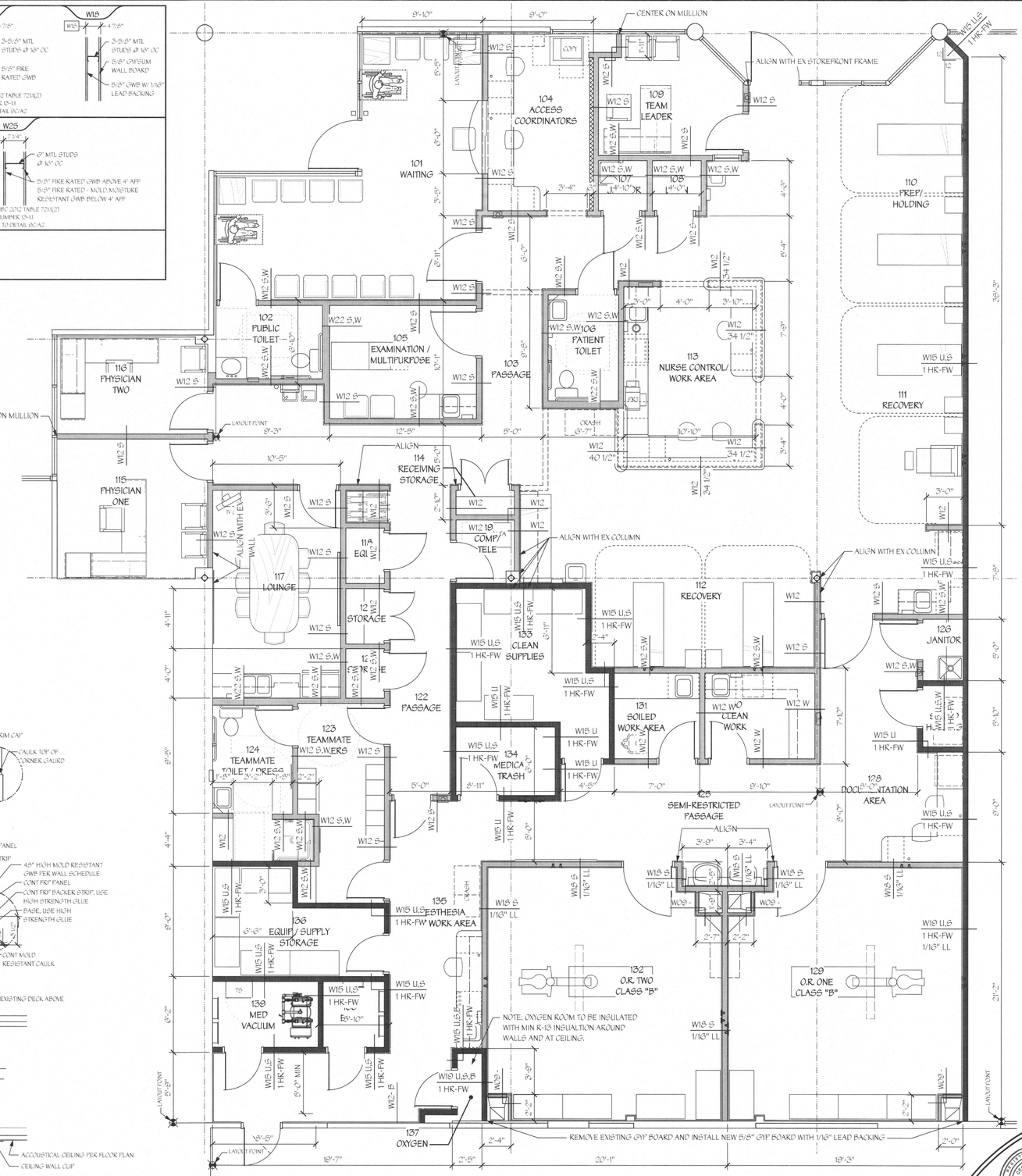

5E / A2 FLOOR PLAN - DIMENSIONS
Scale: 1/4" = 1'-0"

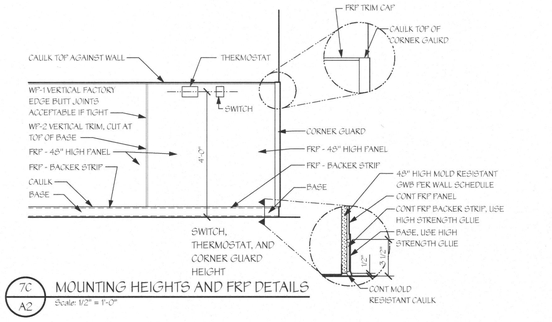

7C / A2 MOUNTING HEIGHTS AND FRP DETAILS
Scale: 1/2" = 1'-0"

REPORT NUMBER
AER-09038

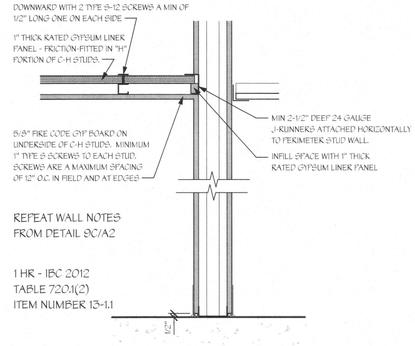

REPEAT WALL NOTES
FROM DETAIL 9C/A2

1 HR - IBC 2012
TABLE 720.1(2)
ITEM NUMBER 13-1.1

9A / A2 FIRE RATED CEILING ASSEMBLY - OXYGEN ROOM
SCALE: 1 1/2" = 1'-0"

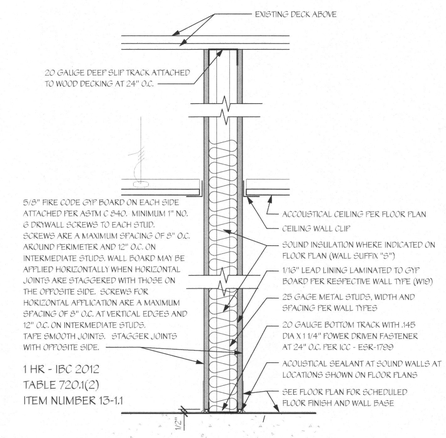

1 HR - IBC 2012
TABLE 720.1(2)
ITEM NUMBER 13-1.1

9C / A2 TYP INTERIOR RATED FULL HEIGHT PARTITION
SCALE: 1 1/2" = 1'-0"

NOTE: CONTRACTOR AND SUB-CONTRACTORS SHALL VISIT THIS BUILDING AND TENANT AREA AND BE FAMILIAR WITH ALL THE EXISTING CONDITIONS PRIOR TO CONTRACT AWARD

ISSUED FOR ARIZONA STATE ASC PLAN REVIEW

dpce
635 Westport Parkway
Suite 300
Grapevine, Texas 76051
Phone: 817.410.7858
Fax: 817-251-8411
don penn ▫ consulting engineer

TENANT RENOVATIONS FOR:
LIFELINE
Access Center
325 S. Euclid Ave, Suite 109
Tucson, AZ 85719

Lifeline Vascular Access

InSync
ARCHITECTURAL DESIGNS, INC.
1213 Old Fyeville Road
Office 410-452-8006
Whiteford, MD 21160
Fax 410-452-8046

REGISTERED ARCHITECT
43189
STEPHANIE FASTI
ARIZONA U.S.A.
1/19/17

0" 1" 2" 3"
1/8"=1'-0" 8' 16' 24'
1/4"=1'-0" 4' 8' 12'

DIMENSION PLAN & WALL TYPES / DTLS

REVISIONS		
REV#	DATE	DESCRIPTION
#1	6/29/16	PERMIT REVIEW COMMENTS
	1/6/17	ARIZONA STATE ASC PLAN REVIEW

DRAWING NO. A2
SHEET OF
DATE 4/13/16 DRAWN BY BPC
JOB NUMBER 11222 CHECKED BY KDP

A B C D E F G H
1 2 3 4 5 6 7 8 9

NOTE;
FIRE PENETRATION DETAILS SHOWN ON THIS PAGE COVER THE ANTICIPATED CONDITIONS THAT SHOULD BE ENCOUNTERED FOR THIS PROJECT. CONTRACTOR SHALL ADVISE ARCHITECT IF A FIRE WALL MUST BE PENETRATED THAT IS NOT COVERED BY ANY OF THESE DETAILS TO OBTAIN PROPER DIRECTION ON THE REQUIREMENTS FOR ANY SUCH PENETRATION.

System No. HW-D-0087

Assembly Rating — 1 And 2 Hr (See Items 2 And 3B)
Nominal Joint Width — 2 In.
Class II And III Movement Capabilities — 20% Compression Or Extension

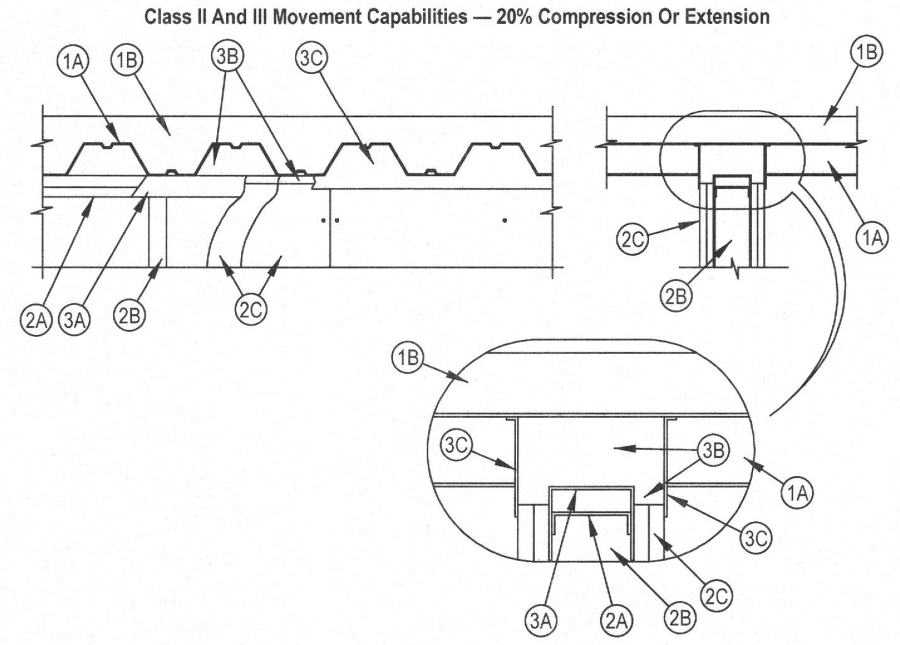

1. Floor Assembly - The fire-rated fluted steel deck/concrete floor assembly shall be constructed of the materials and in the manner described in the individual D700 or D900 Floor-Ceiling Design in the UL Fire Resistance Directory and shall include the following construction features:
A. Steel Floor and Form Units* - Max 3 in. (76 mm) deep galv steel fluted floor units.
B. Concrete - Min 2-1/2 in. (64 mm) thick reinforced concrete, as measured from the top plane of the floor units.
C. Spray-Applied Fire Resistive Materials* - Prior to the installation of the deflection channel, Forming Material and Fill, Void or Cavity Material (Items 3A, 3B, 3C) the steel floor units may be sprayed with a min 5/16 in. (8 mm) to max 1-3/4 in. (44 mm) thickness of fire resistive material. W R GRACE & CO - CONN - Type MK-6-HY
1A. Roof Assembly - (Not Shown) - As an alternate to the floor assembly, a fire rated fluted steel deck roof assembly may be used. The roof assembly shall be constructed of the materials and in the manner described in the individual P900 Series Roof-Ceiling Design in the UL Fire Resistance Directory. The hourly rating of the roof assembly shall be equal to or greater than the hourly rating of the wall assembly. The roof assembly shall include the following construction features:
A. Steel Roof Deck - Max 3 in. (76 mm) deep galv steel fluted roof deck.
B. Roof Insulation - Min 2-1/4 in. (57 mm) thick poured insulating concrete, as measured from the top plane of the floor units.
1B. Roof Assembly - As an alternate to Items 1 and 1A, a fire rated protected fluted steel deck roof assembly may be used. The roof assembly shall be constructed of the materials and in the manner described in the individual P700 Series Roof-Ceiling Design in the UL Fire Resistance Directory. The hourly rating of the roof assembly shall be equal to or greater than the hourly rating of the wall assembly. The roof assembly shall include the following construction features:
A. Steel Roof Deck - Max 3 in. (76 mm) deep galv steel fluted roof deck.
B. Spray-Applied Fire Resistive Materials* - (Not Shown)-Prior to the installation of the steel ceiling runners, Forming Material and Fill, Void or Cavity Material (Items 2A, 3A, 3B), the roof assembly shall be sprayed with the type and thickness of fire resistive material indicated in the individual P700 Series design.
2. Wall Assembly - The 1 or 2 hr fire rated gypsum board/steel stud wall assembly shall be constructed of the materials and in the manner described in the individual U400 or V400 Series Wall and Partition Design in the UL Fire Resistance Directory and shall include the following construction features:
A. Steel Floor and Ceiling Runners - Floor and ceiling runners of wall assembly shall consist of galv steel channels sized to accommodate steel studs (Item 2B). Ceiling runner to be provided with 1 in. (25 mm) flanges. Ceiling runner installed within the U-shaped deflection channel (Item 3A) with a 1-1/2 in. (38 mm) gap maintained between the top of ceiling runner and top of deflection plate.
A1. Light Gauge Framing*-Slotted Ceiling Runner - (For use in applications where the nominal joint width does not exceed 1-1/2 in. or 38 mm) - As an alternate to the ceiling runner in Item 2A, slotted ceiling runner to consist of galv steel channel with slotted flanges sized to accommodate steel studs (Item 2B). Slotted ceiling runner installed perpendicular to direction of fluted steel deck and secured to valleys with steel masonry anchors spaced max 24 in. (610 mm) OC. When slotted ceiling runner is used, deflection channel (Item 3A) shall not be used. When optional spray-applied material is used on the steel deck, slotted ceiling runner secured through spray-applied material to each valley of the steel deck with min 3/16 in. (5 mm) diam steel masonry anchors spaced max 12 in. (305 mm) OC. METAL-LITE INC - The System SCAFCO STEEL STUD MANUFACTURING CO SLIPTRACK SYSTEMS INC - SLP-TRK
A2. Light Gauge Framing*-Vertical Deflection Ceiling Runner - (For use in applications where the nominal joint width does not exceed 1 in. or 25 mm) - As an alternate to the ceiling runners in Items 2A and 2A1, vertical deflection ceiling runner to consist of galv steel channel with slotted vertical deflection clips mechanically fastened within runner. Slotted clips provided with step bushings for permanent fastening of steel studs. Flanges sized to accommodate steel studs (Item 2B). Vertical deflection ceiling runner installed perpendicular to direction of fluted steel deck and secured to valleys with steel masonry anchors spaced max 24 in. (610 mm) OC. When vertical deflection ceiling runner is used, deflection channel (Item 3A) shall not be used. When optional spray-applied material is used on the steel deck, vertical deflection ceiling runner secured through spray-applied material to each valley of the steel deck with min 3/16 in. (5 mm) diam steel masonry anchors spaced max 12 in. (305 mm) OC. THE STEEL NETWORK INC - VertiTrack VTD250, VTD362, VTD400, VTD600 and VTD800
A3. Light Gauge Framing* - Clipped Ceiling Runner - As an alternate to the ceiling runner in Items 2A 2A1 and 2A2, clipped runner to consist of galv steel channel with clips preformed in track flanges which positively engage the inside flange of the steel studs (Item 2B). Track sized to accommodate steel studs (Item 2B). Track flanges to be min 3-1/4 in. (83 mm). Clipped ceiling runner installed perpendicular to direction of fluted steel floor units and secured to valleys with steel masonry anchors spaced max 24 in. (610 mm) OC. When clipped ceiling runner is used, deflection channel (Item 3A) shall not be used. When optional spray-applied material is used on the steel deck, clipped ceiling runner secured through spray-applied material to each valley of the steel deck with min 3/16 in. (5 mm) diam steel masonry anchors spaced max 12 in. (305 mm) OC. TOTAL STEEL SOLUTIONS L L C - Snap Trak
A4. Light Gauge Framing* - Notched Ceiling Runner - As an alternate to the ceiling runners in Items 2A through 2A3, notched ceiling runners to consist of C-shaped galv steel channel with notched return flanges sized to accommodate steel studs (Item 2B). Notched ceiling runner installed perpendicular to direction of fluted steel deck and secured to valleys with steel masonry anchors spaced max 24 in. (610 mm) OC. When notched ceiling runner is used, deflection channel (Item 3A) shall not be used. When optional spray-applied material is used on the steel deck, notched ceiling runner secured through spray-applied material to each valley of steel deck with min 3/16 in. (5 mm) diam steel masonry anchors spaced max 12 in. (305 mm) OC. DENMAR STEEL INC - Type SCR
B. Studs - Steel studs to be min 2-1/2 in. (64 mm) wide. Studs cut 1/2 to 3/4 in. (13 to 19 mm) less in length than assembly height with bottom nesting in and resting on floor runner and with top nesting in ceiling runner without attachment. When slotted ceiling runner (Item 2A1) is used, steel studs secured to slotted ceiling runner with No. 8 by 1/2 in. (13 mm) long wafer head steel screws at midheight of slot on each side of wall. When vertical deflection ceiling runner (Item 2A2) is used, steel studs secured to slotted vertical deflection clips, through the bushings, with steel screws at midheight of each slot. Stud spacing not to exceed 24 in. (610 mm) OC.
C. Gypsum Board* - Gypsum board installed to a min total thickness of 5/8 in. (16 mm) or 1-1/4 in. (32 mm) on each side of wall for 1 and 2 hr rated assemblies, respectively. Wall to be constructed as specified in the individual Wall and Partition Design in the UL Fire Resistance Directory, except that a nom 2 in. (51 mm) gap shall be maintained between the top of the gypsum board and the bottom of the steel deck and the top row of screws shall be installed into the studs 4 to 4-1/2 in. (102 to 114 mm) below the lower surface of the floor or roof. The hourly rating of the joint system is dependent on the hourly rating of the wall.
3. Joint System - Max separation between bottom of floor and top of wall at time of installation of joint system is 2 in. (51 mm). The joint system is designed to accommodate a max 20 percent compression or extension from its installed width. The joint system consists of a deflection channel, forming material and a fill material as follows:
A. Deflection Channel - A nom 3-5/8 in. (92 mm) wide by 3 in. (76 mm) deep min No. 22 gauge steel U-shaped channel. Deflection channel installed perpendicular to direction of fluted steel deck and secured to valleys with steel masonry anchors or by welds spaced max 12 in. (305 mm) OC. When optional spray-applied fire resistive material is used on the steel deck, deflection channel secured through spray-applied material to each valley of steel deck with min 3/16 in. (5 mm) diam steel masonry anchors spaced max 12 in. (305 mm) OC. The ceiling runner (Item 2A) is installed within the deflection channel to maintain a 1-1/2 in. (38 mm) gap between the top of the ceiling runner and the top of the deflection channel. The ceiling runner is not fastened to the deflection channel.
B. Forming Material* - Nom 4 pcf (64 kg/m3) density mineral wool batt insulation cut approx 25 percent wider than the flutes and with a length approx equal to the overall thickness of the wall. Multiple pieces stacked on top of each other, as needed, and then compressed 50 percent in thickness and inserted into the flutes of the steel deck above the top of the ceiling runner. The mineral wool batt insulation is to project beyond each side of the ceiling runner, flush with wall surfaces. Additional 5/8 in. (16 mm) and 1-1/4 in. (32 mm) wide strips for 1 and 2 hr rated assemblies, respectively, of nom 4 pcf (64 kg/m3) mineral wool batt insulation are to be cut to fill the gap between the top of the gypsum board and bottom of the steel deck. The strips of mineral wool are compressed 50 percent and tightly packed, cut edge first, into the gap between the top of the gypsum board and bottom of the steel deck on both sides of the wall. ROCK WOOL MANUFACTURING CO - Delta Board
B1. Forming Material*-Plugs (For use with 3-1/2 in. or 89 mm deep studs or larger) - (Optional-Not Shown) - Preformed mineral wool plugs, formed to the shape of the fluted floor units, friction fit to completely fill the flutes above the ceiling runner. The plugs shall project beyond each side of the ceiling runner, flush with wall surfaces. Additional forming material, described in Item 3B, to be used in conjunction with the plugs to fill the gap between the top of gypsum board and the bottom of plug . HILTI CONSTRUCTION CHEMICALS, DIV OF HILTI INC - CP777 Speed Plugs
B2. Forming Material* - Strips - (Optional) - Nom 5/8 in. (16 mm) and 1-1/4 in. (32 mm) wide by 4 in. (102 mm) thick precut mineral wool strips for 1 and 2 hr rated assemblies, respectively. The strips are compressed 50 percent in thickness and firmly packed into the gap between the top of the gypsum board and bottom of the steel floor units on both sides of the wall. HILTI CONSTRUCTION CHEMICALS, DIV OF HILTI INC - CP 767 Speed Strips
C. Fill, Void or Cavity Material* - Min 1/16 in. (1.6 mm) dry thickness (min 1/8 in. or 3.2 mm wet thickness) of fill material sprayed or troweled on each side of the wall to completely cover mineral wool forming material and to overlap a min of 1/2 in. (13 mm) onto gypsum board and steel deck on both sides of wall. When spray-applied fire resistive material is applied to the steel deck, the fill material is to overlap the gypsum board a min of 1/2 in. (13 mm) and the spray-applied fire resistive material a min of 2 in. (51 mm) on both sides of wall. When spray-applied fire resistive materials are used, the CP672 firestop spray shall overlap the wall a min 1/2 in. (13 mm) and overlap the spray-applied fire resistive material a min of 2 in. (51 mm) on both sides of the wall.

*Bearing the UL Classification Mark

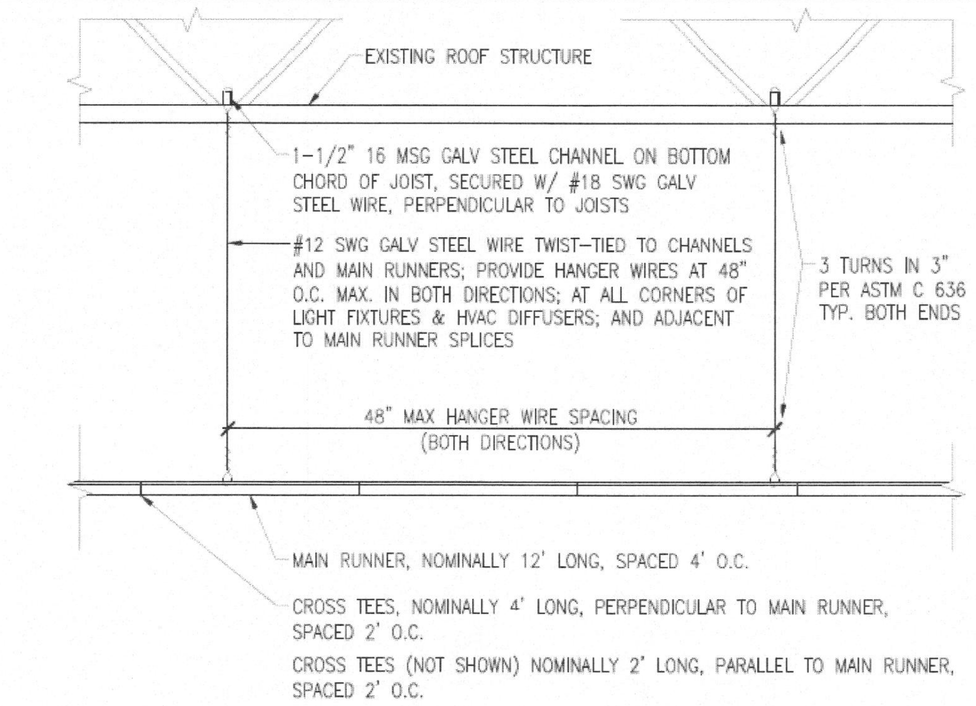

NOTES TO CONTRACTOR:
SUSPENDED CEILING TO BE INSTALLED IN ACCORDANCE WITH ASTM C 636.
DO NOT SUSPEND CEILING GRID FROM HVAC EQUIPMENT OR DUCTWORK.

NOTE - PER ASTM C 636, SEISMIC COMPRESSION STRUTS AND SPLAY BRACING ARE NOT REQUIRED FOR THIS SEISMIC ZONE (SEE CODE INFORMATION ON TITLE SHEET)

3G / A2.1 TYPICAL SUSPENDED CEILING DETAIL
Scale: 3/4" = 1'-0"

NOTE - SUSPENDED GYPSUM BOARD CEILINGS TO BE SIMILARLY CONSTRUCTED USING MAIN TEES AND CROSS TEES DESIGNED FOR GYP BOARD INSTALLATION AND SIZED AND INSTALLED PER MANUFACTURE'S STANDARD PRODUCT INFORMATION AND DETAILS AND IN ACCORDANCE WITH ASTM C 754

Layout with 6' cross tees and main tees 6' OC

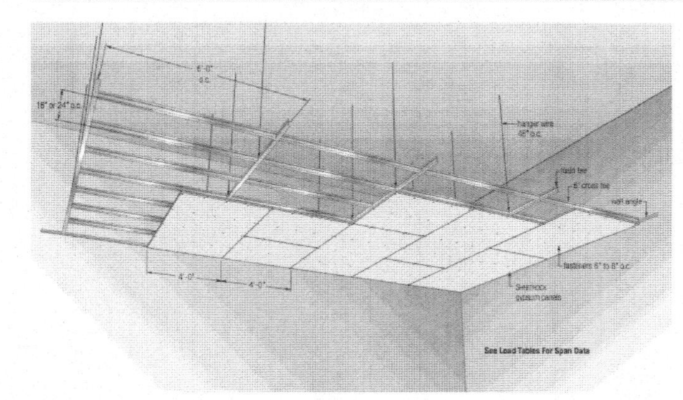

Flat ceiling with 6' cross tees and main tees 6' OC. Requires 1/3 fewer main tees and hanger wires.

Cross tee/main tee intersection

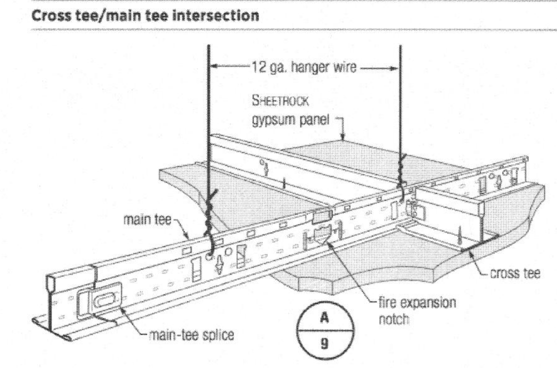

Cross-channel detail

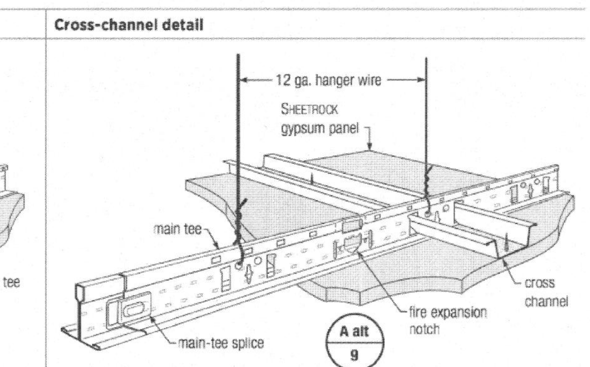

System No. W-L-7040

F Ratings — 1 and 2 Hrs (See Items 1 and 3)
T Rating — 0 Hr

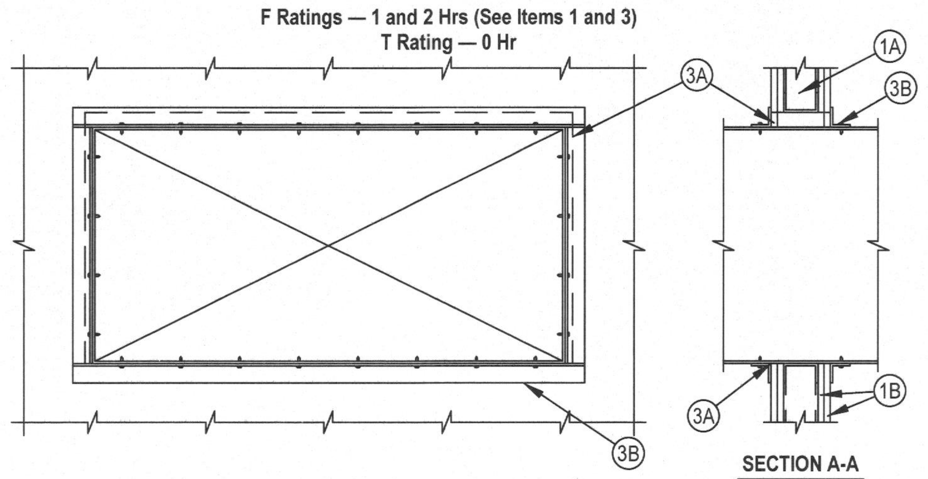

1. Wall Assembly - The fire-rated gypsum wallboard/stud wall assembly shall be constructed of the materials and in the manner specified in the individual U300 or U400 Series Wall and Partition Designs in the Fire Resistance Directory and shall include the following construction features:
A. Studs - Wall framing may consist of either wood studs or steel channel studs. Wood studs to consist of nom 2 by 4 in. lumber spaced 16 in. OC. Steel studs to be min 2-1/2 in. wide and spaced max 24 in. Additional framing members shall be used to completely frame around opening.
B. Gypsum Board* - Nom 5/8 in. thick with square or tapered edges. The gypsum wallboard type, number of layers and sheet orientation shall be as specified in the individual Wall and Partition Design Number. Max area of opening is 1300 in. with the dimension of 50 in. The hourly F rating of the firestop system is equal to the hourly fire rating of the wall assembly in which it is installed.
2. Steel Duct - Nom 24 in. by 48 in. (or smaller) No. 24 gauge (or heavier) galv steel duct to be installed within the firestop system. The annular space shall be min 0 (point contact) in. to a max 2 in. Duct to be rigidly supported on both sides of the wall assembly.
3. Firestop System - The firestop system shall consist of the following:
A. Fill, Void or Cavity Material*-Sealant - Min 5/8 in. thickness of fill material applied within annulus flush with both surfaces of wall. At point contact location, a min 1/2 in. diam bead of fill material shall be applied to the wall/duct interface on both surfaces of wall.
B. Steel Retaining Angle - No. 18 MSG (0.048 in.) galv steel angles cut to fit contour of duct with a 2 in. overlap on the duct and a min 1 in. overlap on the gypsum board assembly on both sufaces of wall. 2 in. leg of angle secured to duct with min No. 8 by 3/4 in. long sheet metal screws, spaced a max of 6 in. OC. When bead of fill material is used at joint contact locations, angles shall be installed prior to full material curing.

*Bearing the UL Classification Mark

System No. W-L-7059

F Ratings - 1 and 2 Hr
T Rating - 1/2 and 3/4 Hr

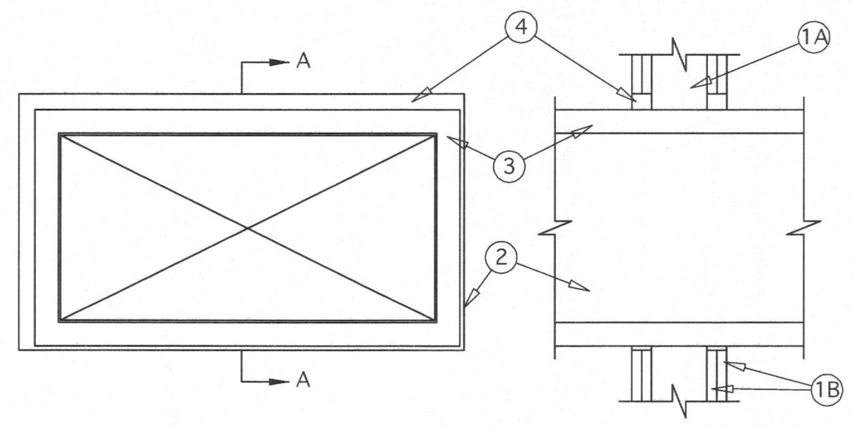

1. Wall Assembly The 1 or 2 fire-rated gypsum wallboard/stud wall assembly shall be constructed of the materials and in the manner specified in the individual U400 Series or Partition Designs in the UL Fire Resistance Directory and shall include the following construction features:
A. Studs Wall framing shall consist of channel studs. Steel studs to be min 2-1/2 in . wide and spaced max 24 in. OC. The opening in the will to accommodate the steel duct (item 2) shall be framed on all sides using lengths of studs installed between the vertical studs and attached to the studs at each end. The framed opening in the wall shall be a nom 6 in. wide and 12 in. or higher than the width and height of the steel duct.
B. Wallboard, Gypsum* 5/8 in. thick, 4 ft wide with square or tapered edges. The gypsum wallboard type, thickness, number of layers, fastener type and sheet orientation shall be as specified in the individual U300 or U400 Series Design in the UL Fire Resistance Directory. Max area of opening is 395 sq. in. with max dimensions of 26-3/4 in. for steel studs.
2. Steel Duct Nom 24 in. by 12 in. (or smaller) 24 guage (or heavier) steel duct. to be installed eccentrically within the opening. the annular space shall be min 1 in. to max 1-3/4. Duct to be rigidly supported on both sides of the wall assembly.
3. Batt and Blanket* - Max 1-1/2 thick glass fiber batt or blankett (min. 3.4 pcf) jacketed on the outside with a foil-scrim-kraft facing, compressed 50% such that the annular space within the firestop system shall be min 1/4 in. to max 1 in. See Batts and Blankets (BKNV) category in the Building Materials Directory for names manufacturers. Any batt or blanket meeting the above specifications and bearing the UL Classification Marking with a Flame Spread Index of 25 or less and a smoke Developed Index 50 or less may be used.
4. Fill, Void or Cavity Material* - Sealant Min 5/8 in. or 1-1/4 in. thickness of fill material applied within the annulus, flush with both surfaces of wall for 1 or 2 hr walls, respectively. If voids develops after the fill material cures, the voids shall be sealed with additional fill material.

*Bearing the UL Classification Mark

System No. W-L-2078

F Ratings — 1 and 2 Hr (See Item 1)
T Ratings — 0, 1 and 2 Hr (See Items 2 and 3)
L Rating At Ambient — 3 CFM/sq ft
L Rating At 400 F — Less Than 1 CFM/sq ft

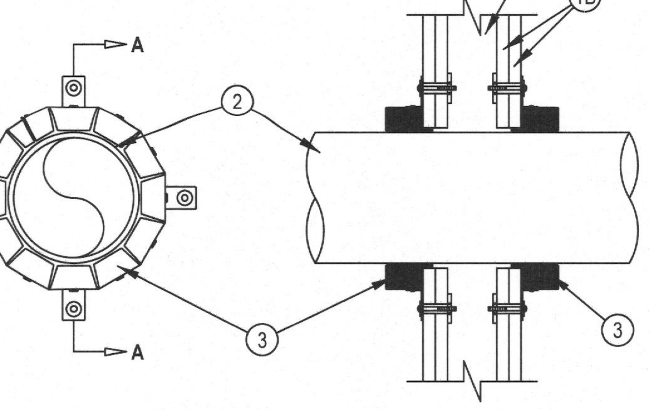

1. Wall Assembly - The fire-rated gypsum board/stud wall assembly shall be constructed of the materials and in the manner specified in the individual U300, U400 or V400 Series Wall and Partition Designs in the UL fire Resistance Directory and shall include the construction features noted below:
A. Studs - Wall framing may consist of either wood studs or steel channel studs. Wood studs to consist of nom 2 by 4 in. lumber spaced max 16 in. OC. Steel studs to be min 2-1/2 in. wide and spaced max 24 in. OC.
B. Gypsum Board* - Nom 5/8 in. thick gypsum board, as specified in the individual Wall and Partition Design. Max diam of opening is 11-1/2 in. The hourly F Rating of the firestop system is equal to the hourly fire rating of the wall assembly in which it is installed.
2. Through-Penetrants - One nonmetallic pipe, conduit or tubing to be installed within the firestop system. The annular space between pipe and periphery of opening shall be min 0 in. (point contact) to max 1/2 in. Pipe or conduit to be rigidly supported on both sides of the wall assembly. The following types and sizes of nonmetallic pipes may be used:
A. Polyvinyl Chloride (PVC) Pipe - Nom 10 in. diam (or smaller) Schedule 40 solid-core
or cellular core PVC pipe for use in closed (process or supply) or vented (drain, waste
or vent) piping system.
B. Chlorinated Polyvinyl Chloride (CPVC) Pipe - Nom 10 in. diam (or smaller) SDR13.5 CPVC pipe for use in closed (process or supply) piping systems.
C. Acrylonitrile Butadiene Styrene (ABS) Pipe - Nom 6 in. diam (or smaller) Schedule 40 solid-core or cellular core ABS pipe for use in closed (process or supply) or vented (drain, waste or vent) piping systems
D. Flame Retardant Polypropylene (FRPP) Pipe - Nom 6 in. diam (or smaller) Schedule 40 FRPP pipe for use in closed (process or supply) or vented (drain, waste or vent) piping system.
E. Polyvinylidene Fluoride (PVDF) Pipe - Nom 4 in. diam (or smaller) PVDF pipe for use in
closed (process or supply) or vented (drain, waste or vent) piping system.
When max 6 in. diam pipe is used, T Rating is equal to the hourly fire rating of the wall.
When nom 8 in. or 10 in. diam pipe is used, T Rating is 0 hr.
3. Firestop Device* - Firestop Collar - Firestop collar shall be installed in accordance with the accompanying installation instructions. Collar to be installed and latched around the pipe and secured to both sides of the wall using the anchor hooks provided with the collar. (Minimum two anchor hooks for 1-1/2 and 2 in. diam pipes, three anchor hooks for 3 and 4 in. diam pipes, four anchor hooks for 6 in. diam pipes, ten anchor hooks for 8 in. diam pipes and twelve anchor hooks for 10 in. diam pipes). The anchor hooks are to be secured to the surface of wall with 3/16 in. diam by 2-1/2 in. long steel toggle bolts along with washers. As an alternate for pipe sizes of nom 4 in. diam or less, min No. 10 by 1-1/2 in. long drywall or laminate screws with min 3/4 in. steel washers may be used. When the drywall or laminate screw is used, T Rating shall not exceed 1 hr.
4. Fill, Void or Cavity Material* - Sealant - (Not Shown) - Min 1/2 in. thickness of sealant applied within the annular space for nom 8 in. and 10 in. diam pipes, flush with each side of wall. Sealant in annular space is optional for max 6 in. diam pipes. A min 1/4 in. thickness of sealant is required within the annular space, flush with each side of wall, to attain the L Ratings for max 6 in. diam pipes.

*Bearing the UL Classification Mark

System No. W-L-2128

F Rating — 1 and 2 Hr (See Item 1)
T Rating — 0 Hr

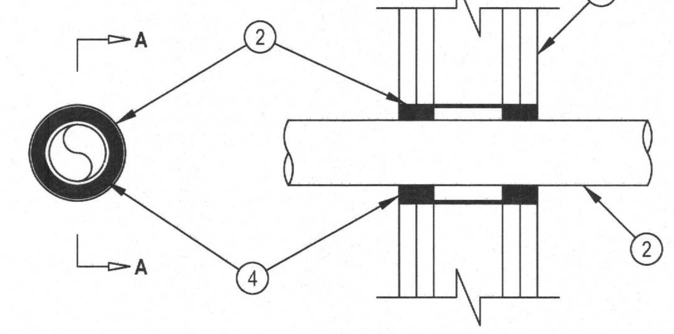

1. Wall Assembly - The 1 or 2 hr fire-rated gypsum wallboard/stud wall assembly shall be constructed of the materials and in the manner specified in the individual U300 or U400 Series Wall and Partition Designs in the UL Fire Resistance Directory and shall include the following construction features:
A. Studs - Wall framing may consist of either wood studs or steel channel studs. Wood studs to consist of nom 2 by 4 in. lumber spaced 16 in. OC. Steel studs to be min 2-1/2 in. wide and spaced max 24 in. OC.
B. Gypsum Board* - 5/8 in. thick, 4 ft wide with square or tapered edges. The gypsum wallboard type, thickness, number of layers, fastener type and sheet shall be as specified in the individual Wall and Partition Design. Max diam of opening is 3-1/2 in.
2. Metallic Sleeve Optional - Nom 3-1/2 in. (or smaller) cylindrical sleeve fabricated from min 0.016 in. thick (28 gauge) galv sheet steel and having a min 1-1/4 in. lap along longitudinal seam. Length of sleeve to be installed flush with wall surfaces.
3. Through Penetrants - One nonmetallic pipe installed within the firestop system.. Pipe may be installed at an angle not greater than 45 degrees from perpendicular. Pipe to be rigidly supported on both sides of wall assembly. The space between pipe and periphery of opening shall be min 1/4 in. to max 11/16 in. The following types and sizes of nonmetallic pipes may be used:
A. Polyvinyl Chloride (PVC) Pipe - Nom 2 in. diam (or smaller) Schedule 40 PVC pipe for use in closed (process or supply) or vented (drain, waste or vent) piping systems.
B. Chlorinated Polyvinyl Chloride (CPVC) Pipe - Nom 2 in. diam (or smaller) SDR13. CPVC pipe for use in closed (process or supply) piping systems.
4. Fill, Void or Cavity Materials* - Sealant - For 1 hr F Rating, min 5/8 in. thickness of fill material applied within the annulus, flush with both surfaces of wall. For 2 hr F Rating, min 1-1/4 in. thickness of fill material applied within annulus, flush with both surfaces of wall.

*Bearing the UL Classification Mark

System No. W-L-1054

F Ratings - 1 and 2 Hr (See Items 1 and 3)
T Rating - 0 Hr
L Rating At Ambient - Less Than 1 CFM/Sq Ft
L Rating At 400 F - 4 CFM/Sq Ft

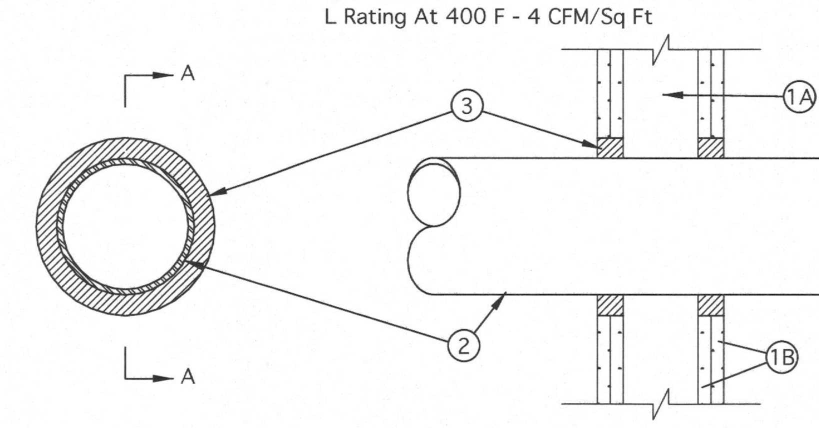

1. Wall Assembly -- The 1 or 2 hr fire-rated gypsum wallboard/stud wall assembly shall be constructed of the materials and in the manner specified in the individual U300 or U400 Series Wall and Partition Designs in the UL Fire Resistance Directory and shall include the following construction features:
A. Studs -- Wall framing may consist of either wood studs or steel channel studs. Wood studs to consist of nom 2 by 4 in. lumber spaced 16 in. OC. Steel studs to be min 2-1/2 in. wide and spaced max 24 in. OC. When steel studs are used and the diam of opening exceeds the width of stud cavity, the opening shall be framed on all sides using lengths of steel stud installed between the vertical studs and screw-attached to the steel studs at each end. The framed opening in the wall shall be 4 to 6 in. wider and 4 to 6 in. higher than the diam of the penetrating item such that, when the penetrating item is installed in the opening, a 2 to 3 in. clearance is present between the penetrating item and the framing on all four sides.
B. Gypsum Board* -- 5/8 in. thick, 4 ft wide with square or tapered edges. The gypsum board type, thickness, number of layers, fastener type and sheet orientation shall be as specified in the individual U300 or U400 Series Design in the UL Fire Resistance Directory. Max diam of opening is 32-1/4 in. for steel stud walls. Max diam of opening is 14-1/2 in. for wood stud walls. The F Rating of the firestop system is equal to the fire rating of the wall assembly.
2. Through-Penetrants -- One metallic pipe, conduit or tubing to be installed either concentrically or eccentrically within the firestop system. The annular space shall be min 0 in. to max 2-1/4 in. Pipe may be installed with continuous point contact. Pipe, conduit or tubing may be installed at an angle not greater than 45 degrees from perpendicular. Pipe, conduit or tubing to be rigidly supported on both sides of wall assembly. The following types and sizes of metallic pipes, conduits or tubing may be used:
A. Steel Pipe -- Nom 30 in diam (or smaller) Schedule 10 (or heavier) steel pipe.
B. Iron Pipe -- Nom 30 in. diam (or smaller) cast or ductile iron pipe.
C. Conduit -- Nom 4 in diam (or smaller) steel electrical metallic tubing or 6 in. diam steel conduit.
D. Copper Tubing -- Nom 6 in. diam (or smaller) Type L (or heavier) copper tubing.
E. Copper Pipe -- Nom 6 in. diam (or smaller) regular (or heavier) copper pipe.
3. Fill, Void or Cavity Material* -- Sealant -- Min 5/8 in. thickness of fill material applied within the annulus, flush with both surfaces of wall. At the point or continuous contact locations between pipe and wall, a min 1/2 in. diam bead of fill material shall be applied at the pipe wall interface on both surfaces of wall .

*Bearing the UL Classification Mark

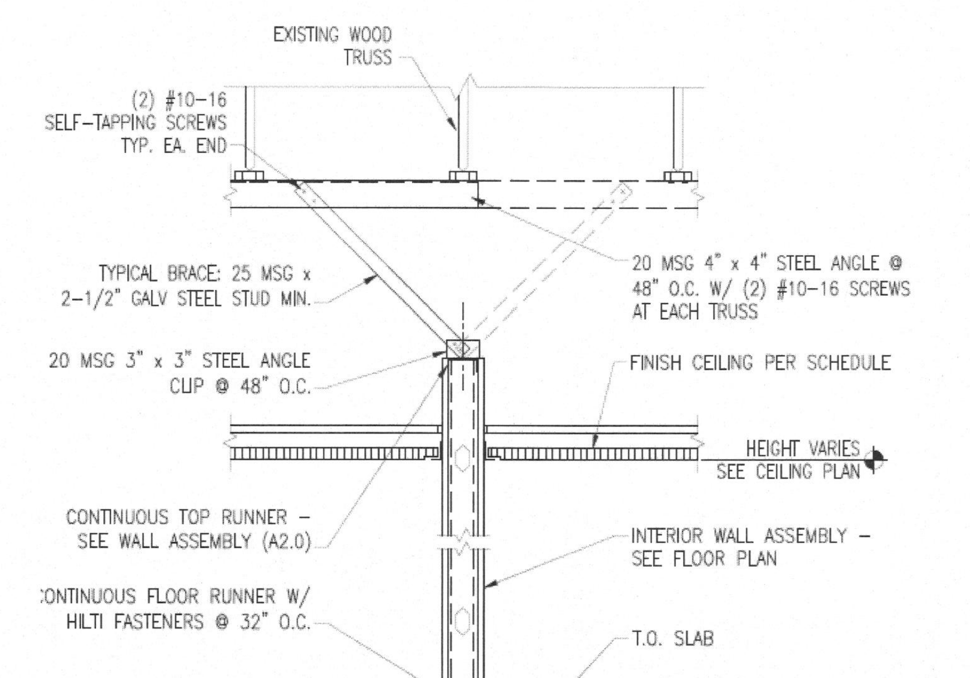

NOTES:
1. PROVIDE (1) BRACE IN ALTERNATING DIRECTIONS AT UNSUPPORTED WALLS @ 48" O.C. MAX.
2. PROVIDE (1) BRACE IN ALTERNATING DIRECTIONS AT EACH SIDE OF DOOR & WINDOW OPENINGS.

9G / A2.1 TYPICAL INTERIOR WALL BRACING
Scale: 3/4" = 1'-0"

NOTE; CONTRACTOR AND SUB-CONTRACTORS SHALL VISIT THIS BUILDING AND TENANT AREA AND BE FAMILIAR WITH ALL THE EXISTING CONDITIONS PRIOR TO CONTRACT AWARD

ISSUED FOR ARIZONA STATE ASC PLAN REVIEW

dpce
don penn ▫ consulting engineer
635 Westport Parkway
Suite 300
Grapevine, Texas 76051
Phone: 817-410-2858
Fax: 817-251-8411

TENANT RENOVATIONS FOR:
LIFELINE
Access Center
325 S. Euclid Ave, Suite 109
Tucson, AZ 85719

Lifeline Vascular Access

InSync Architectural Designs, Inc.
1213 Old Pylesville Road
Office 410-452-8006
Whiteford, MD 21160
Fax 410-452-8046

REGISTERED ARCHITECT CERTIFICATE NO. 43189 STEPHANIE FANTL DATE SIGNED 1/19/17 ARIZONA U.S.A.

0" 1" 2" 3"
1/8"=1'-0" 8' 16' 24'
1/4"=1'-0" 4' 8' 12'

FIRE DETAILS AND WALL DETAILS

REVISIONS		
REV#	DATE	DESCRIPTION
#1	6/29/16	PERMIT REVIEW COMMENTS
	1/6/17	ARIZONA STATE ASC PLAN REVIEW

DRAWING NO. A2.1
SHEET OF
DATE 4/13/16 DRAWN BY
JOB NUMBER 11222 CHECKED BY

A B C D E F G H
1 2 3 4 5 6 7 8 9

CONSTRUCTION NOTES

(27) CONSTRUCTION NOTE DESIGNATION

GENERAL NOTE; CAREFULLY SAW CUT EXISTING SLAB AS REQUIRED TO INSTALL NEW UNDERSLAB PLUMBING. PATCH SLAB WITH 3,500 PSI CONCRETE IN THICKNESS MATCHING EXISTING SLAB FOLLOWING INSTALLATION OF NEW UNDERSLAB PIPING. CONTRACTOR SHALL CAREFULLY COORDINATE NEW MIX DESIGN WITH THE REQUIREMENTS OF THE FLOORING CONTRACTOR TO INSURE THAT MOISTURE CONTENT AND ALKALI FLOORING PREPARATION TESTS MEET FLOORING MANUFACTURE'S RECOMMENDATIONS.

ALL INTERIOR FINISHES SHALL COMPLY WITH THE CLASSIFICATION REQUIREMENTS OUTLINED IN APPLICABLE SECTIONS OF THE INTERNATIONAL BUILDING CODE FOR THE AREAS BEING INSTALLED.

OWNER WILL PROVIDE APPROXIMATE 50 VARIOUS TYPES OF INTERIOR SIGNAGE DEVICES (INCLUDING SIGNAGE FOR TOILETS), WHICH ARE TO BE INSTALLED BY THE CONTRACTOR. CONTRACTOR SHALL COORDINATE THE DELIVERY AND INSTALLATION WITH OWNER.

1 PROVIDE THE FOLLOWING APPLIANCES. REMOVE ALL PACKING MATERIAL / INSTALL AND VERIFY EACH APPLIANCE IS OPERATING PROPERLY.

a. FULL SIZE GE (OR APPROVED EQUAL) REFRIGERATOR - LARGE UNIT THAT WILL FIT INTO 36" WIDE SPACE. UNIT TO BE OVER UNDER (NOT SIDE BY SIDE). FREEZER CAN BE EITHER TOP OR BOTTOM. UNIT SHALL HAVE AN ICE MAKER AND WATER DISPENSER.

b. NOT USED ON THIS PROJECT

c. MICROWAVE - 1,000 WATT GE (OR APPROVED EQUAL) MICROWAVE THAT WILL FIT IN THE SPACE SHOWN ON THE INTERIOR ELEVATIONS (ABOUT 22" WIDE X 16" HIGH X 14" DEEP).

d. UNDER COUNTER REFRIGERATOR - LOCKABLE "MEDICATION" UNDERCOUNTER REFRIGERATOR. SUMMIT 5.5 CU FT FROST FREE ALL REFRIGERATOR WITH LOCK. CONTRACTOR MAY CONTACT THE DAVITA VENDOR - STEVE ZINDELL - SUMMIT APPLIANCE DIVISION, FILIX STORCH INC. 770 GARRISON AVE, BRONX NY 10474 - FAX 718-842-3093 FOR DAVITA PRICING. THIS IS THEIR ITEM FFGL.

e. WALL MOUNTED COMBINATION TV/DVD - 32" TO 36" FLAT SCREEN SONY (OR APPROVED EQUAL) TV WITH A COMBINATION DVD/VCR (EITHER BUILT-IN OR ATTACHED). PROVIDE WALL MOUNTING BRACKET DESIGNED FOR SELECTED TV AND DVD UNIT AND THAT PROVIDES MOVEMENT TO ALLOW TV TO FACE ALL PARTS OF ROOM. MOUNT HIGH ON THE WALL IN THE CORNER INDICATED. COORDINATE EXACT LOCATION WITH OWNER. PROVIDE BLOCKING FOR WALL BRACKET.

f. WALL MOUNTED TV - 32" TO 36" FLAT SCREEN SONY (OR APPROVED EQUAL) TV. PROVIDE WALL MOUNTING BRACKET DESIGNED FOR SELECTED TV THAT PROVIDES MOVEMENT TO ALLOW TV TO FACE ALL PARTS OF ROOM. MOUNT HIGH ON THE WALL IN THE CORNER INDICATED. COORDINATE EXACT LOCATION WITH OWNER. PROVIDE BLOCKING FOR WALL BRACKET.

2 NURSE CALL SYSTEM. REFER TO ELECTRICAL DRAWINGS FOR COMPONENT SPECIFICATIONS. ALL COMPONENTS TO BE PROVIDED BY EXPEDITOR SYSTEMS - CONTACT GEORGE POWERS AT 800-843-9651 (gpowers@expeditor.com). THE FOLLOWING COMPONENTS ARE TO BE PROVIDED AT THE DESIGNATED LOCATIONS.

a. POSITION HELP CALL ON PENDENT WITH LINEN CLIP.

b. WALL MOUNTED CALL SWITCH ACTIVATED BY PULL ON CHORD.

c. EMERGENCY CALL ("CODE BLUE") WALL MOUNTED CALL BUTTON WITH HINGED "ELBOW PLATE" TO FACILITATE EMERGENCY ACTIVATION.

d. ENUNCIATOR / HELP / CALL PANEL.

3 PROVIDE THE FOLLOWING ACCESSORY ITEMS. INSTALL PER MANUFACTURE'S RECOMMENDATIONS.

a. COAT HOOK EQUAL TO B682 BY BOBRICK TO BE MOUNTED ON THE ROOM SIDE OF DOOR, IN CENTER OF DOOR AT A HEIGHT OF 4'-6" AFF.

b. PAPER TOWEL DISPENSER EQUAL TO MODEL B-2621 BY BOBRICK WASHROOM EQUIPMENT ADJACENT TO SINK (REFER TO CASEWORK ELEVATIONS) COORDINATE EXACT MOUNTING WITH OWNER

c. 24"X60" HIGH MIRROR (BOBRICK B-165). MOUNT TOP OF MIRROR AT 6'-6" AFF.

d. NOT USED ON THIS PROJECT.

e. 8" DEEP X 72" LONG STAINLESS STEEL SHELF EQUAL TO B298(x3) BY BOBRICK. MOUNT SHELF TO PLASTIC LAMINATE BACK SPLASH, CENTERED HORIZONTALLY WITH TOP OF SHELF AT 4'-8" AFF.

f. MOP AND BROOM HOLDER - EQUAL TO TYPE B-223X24 BY BOBRICK. MOUNT AT 5'-0" AFF.

g. 8 1/2" x 8 1/2" GLASS CORNER SHELF EQUAL TO FRESCA OTTIMO BATHROOM CORNER SHELF WITH RAILING.

4 PROVIDE THE FOLLOWING PLASTIC LAMINATE ITEMS. LAMINATE COLOR SHALL BE "PL-1" UNLESS NOTED OTHERWISE;

a. PLAS LAMINATE CHAIR RAIL AROUND PERIMETER OF WAITING ROOM. CHAIR RAIL TO BE 1"X4". REFER TO DETAIL 2A/A5.

b. 2 - 16" DEEP PLAS LAMINATE SHELVES WITH ADJUSTABLE SHELF HARDWARE W/ MINIMUM OF THREE ADJUSTABLE SHELF STANDARDS - 3' LONG. TOP OF SHELF STANDARDS TO BE 18" FROM FINISH CEILING.

c. 3 - 16" DEEP PLAS LAMINATE SHELVES WITH ADJUSTABLE SHELF HARDWARE W/ MINIMUM OF THREE ADJUSTABLE SHELF STANDARDS - 5' LONG. TOP OF SHELF STANDARDS TO BE 18" FROM FINISH CEILING.

d. PLASTIC LAMINATE MOUNTING BOARD FOR LEAD APRON HANGING RACK OR WHITE BOARD (RACK/BOARD PROVIDED BY OWNER, INSTALLED BY CONTRACTOR). MOUNTING BOARD SHALL BE FROM 3/4" PLYWOOD AND SHALL BE 6'-8" WIDE x 4'-6" HIGH WITH TOP AT 6'-0" ABOVE FINISH FLOOR. COORDINATE EXACT LOCATION AND MOUNTING HEIGHT OF RACK (ON PLAS LAM MOUNTING BOARD) WITH OWNER.

e. PLASTIC LAMINATE BACK SPLASH BEHIND SINK. SPLASH SHALL BE FROM 3/4" PLYWOOD AND SHALL BE 6'-6" WIDE X 4'-6" WITH TOP AT 6'-0" ABOVE FINISH FLOOR.

f. PLAS LAMINATE SHELF FOR TV EQUIPMENT. SHELF TO BE 18" WIDE BY 16" DEEP WITH 3" RADIUS CORNERS. MOUNT SHELF NEAR TV. COORDINATE EXACT PLACEMENT WITH OWNER.

g. PLAS LAMINATE SHELF IN CORNER. 18"X18". MOUNT TOP OF SHELF AT 4'-3" AFF. PLAS LAM COLOR "A".

5 PROVIDE WALL PROTECTION WAINSCOT. REFER TO ROOM FINISH SCHEDULE FOR SELECTION. INSTALL ON TOP OF WALL BASE AND CAULK JOINT BETWEEN BASE AND BOTTOM OF FRP. INSTALL VERTICAL DIVIDER BARS, TOP HORIZONTAL TRIM AND INSIDE CORNER TRIM PIECES MANUFACTURED BY WALL PANEL MANUFACTURE TO MATCH PANELS. FACTORY EDGE "BUTT" JOINTS ARE ACCEPTABLE FOR "WP-1" PANELS ONLY BUT THESE JOINTS MUST BE TIGHT AND UNIFORM FOR A CONCEALED APPEARANCE. PANELS AND TRIM SHALL BE INSTALLED PER MANUFACTURE'S RECOMMENDATIONS AND STANDARD DETAILS. REFER TO THE FOLLOWING SUFFIX FOR ADDITIONAL REQUIREMENTS.

a. 51 1/2" HIGH "WP-1" WAINSCOT ALONG WALLS INDICATED. MOUNT 48" HIGH SHEET PER DETAIL 9F/A2. CAULK TOP TRIM BETWEEN WALL AND TRIM. IT IS THE INTENT THAT THIS WAINSCOT BE CONTINUOUS ALONG WALLS BETWEEN NOTES.

b. SAME AS 5a AROUND ENTIRE WHEELCHAIR ALCOVE. CUT AROUND BOTTOM OF CABINETS.

c. WALL PROTECTION PANELS "WP-1" TO UNDERSIDE OF WALL CAP. INSTALL SIMILAR TO DETAIL 9F/A2. INSTALL WITH FACTORY EDGE AGAINST WALL CAP. CAULK TOP OF PANELS AT UNDERSIDE OF WALL CAP.

d. 51 1/2" HIGH "WP-2" WAINSCOT ALONG WALLS INDICATED. MOUNT 48" HIGH SHEET PER DETAIL 9F/A2. CAULK TOP TRIM BETWEEN WALL AND TRIM. IT IS THE INTENT THAT THIS WAINSCOT BE CONTINUOUS ALONG WALLS BETWEEN NOTES.

e. SIMILAR TO 5d ON WALLS BEHIND AND NEXT TO SINK. EXTEND 4' FROM CORNER.

6 PROVIDE THE FOLLOWING IPC DOOR AND WALL PROTECTION SYSTEMS PRODUCTS BY INPRO CORPORATION AT SUFFIX LOCATIONS INDICATED. SEE ROOM FINISH SCHEDULE FOR COLOR SELECTIONS. INSTALL PER MANUFACTURE'S RECOMMENDATIONS WITH ALL ACCESSORIES REQUIRED FOR A COMPLETE INSTALLATION.

a. MODEL #3348 CORNER GUARDS (90 DEGREE AND 135 DEGREE AS REQUIRED) IPC DOOR AND WALL PROTECTION SYSTEMS BY INPRO CORPORATION AT LOCATIONS INDICATED. UNITS SHALL BE 48" LONG WITH 3" LEGS, MOUNTED AT TOP OF WALL BASE.

b. SIMILAR TO CORNER GUARD UNITS ABOVE WITH ONE AT EACH WALL CORNERS SIZED TO COVER END OF WALL WITHOUT OVERLAPPING.

c. FRAME PROTECTOR GUARDS 400C-04-DFG .040 IPC DOOR AND WALL PROTECTION SYSTEMS BY INPRO CORPORATION AT LOCATIONS INDICATED.

7 OXYGEN SYSTEM COMPONENTS AT THE LOCATIONS INDICATED BELOW. REFER TO OXYGEN PLAN SHEET A6.

a. MED GAS SYSTEM MASTER ALARM

b. OXYGEN/VACUUM SYSTEM ZONE VALVE BOXES.

c. OXYGEN STATION OUTLET @ ABOUT 44" AFF (SHOULD BE INLINE WITH ELECTRICAL OUTLETS).

d. VACUUM STATION OUTLET @ ABOUT 44" AFF (SHOULD BE INLINE WITH ELECTRICAL OUTLETS).

8 PROVIDE HEAVY DUTY WHITE WIRE SHELF UNITS IN THE CONFIGURATIONS AND LOCATIONS INDICATED AS FOLLOWS. PROVIDE ADEQUATE BLOCKING IN WALL TO SUPPORT ANCHORS. PROVIDE MID SPAN SUPPORT AS REQUIRED.

a. HEAVY DUTY 16" DEEP WHITE WIRE SHELVES MOUNTED PER DETAIL 6F/A5 FOR FULL LENGTH BETWEEN WALLS.

9 PUSH PADDLE FOR POWER ASSISTED DOOR OPENER. PADDLE SHALL HAVE "HC" MARKINGS. COORDINATE WITH HARDWARE SCHEDULE, EXTERIOR DOOR CONTROL DIAGRAM 9C/A4 AND ELECTRICAL DRAWINGS. COORDINATE EXACT LOCATIONS WITH OWNER. REFER TO NOTE #18 FOR DOOR BELL PER ELECTRICAL DRAWINGS.

a. PUSH PADDLE FOR POWER ASSISTED DOOR OPENER MOUNTED IN WALL. PADDLE SHALL NOT HAVE "HC" MARKINGS. COORDINATE WITH HARDWARE SCHEDULE AND ELECTRICAL DRAWINGS. COORDINATE EXACT LOCATIONS WITH OWNER.

b. PUSH PADDLE FOR POWER ASSISTED DOOR OPENER AT MAIN ENTRY DOOR. MOUNT IN WALL ABOVE COUNTER. PADDLE SHALL HAVE "HC" MARKINGS. COORDINATE WITH HARDWARE SCHEDULE, EXTERIOR DOOR CONTROL DIAGRAM 9C/A4 AND ELECTRICAL DRAWINGS. COORDINATE EXACT LOCATIONS WITH OWNER.

c. PROVIDE ALUMINUM PEDESTAL MOUNTED TO EXISTING CONCRETE SLAB WHICH IS DESIGNED TO ACCOMMODATE HC ACCESS DOOR PUSH PADDLE. PADDLE TO BE MOUNTED IN PEDESTAL. REFER TO NOTE #18 FOR DOOR BELL PER ELECTRICAL DRAWINGS ABOVE DOOR PADDLE IN PEDESTAL.

10 PROVIDE GYP BOARD CASED OPENING PER INTERIOR ELEVATIONS.

11 PROVIDE HEAVY DUTY/COMMERCIAL GRADE ALUMINUM SLIDING TRACK DESIGNED FOR TWO INDEPENDENT SECTIONS OF GLASS. TRACK SHALL BE ON ALL FOUR SIDES OF OPENING. RECESS BOTTOM TRACK INTO COUNTERTOP SUCH THAT TOP EDGE OF TRACK IS FLUSH WITH TOP OF COUNTERTOP. INSTALL TWO EQUAL SIZED SLIDING GLASS PANELS IN OPENING. GLASS EDGES SHALL BE GROUND SMOOTH AND MEETING SECTIONS SHALL OVERLAP A MINIMUM OF 1/2". PROVIDE LOCKING DEVICE(S) TO SECURE GLASS IN A CLOSED POSITION. PROVIDE RUBBER STOPS IN ALUMINUM FRAME AND HANDLES MOUNTED TO INSIDE FACE OF GLASS TO ALLOW OPENING OF GLASS FROM ANY DIRECTION.

12 PROVIDE 2" DIAMETER CABLE ACCESS HOLE IN COUNTER. PROVIDE PLASTIC GROMMET WITH CABLE COVER. COORDINATE EXACT LOCATION WITH OWNER.

13 EXISTING COLUMN TO REMAIN. REFER TO DIMENSION FLOOR PLAN FOR WALL LAYOUT AROUND COLUMN. FURR OUT TO CONCEAL AS APPLICABLE. KEEP SIZE OF FURRING TO A MINIMUM.

14 COORDINATE INSTALLATION OF OWNER PROVIDED EQUIPMENT.

15 CONTRACTOR TO INSTALL OWNER PROVIDED BULLETIN BOARD OR MARKER BOARD. COORDINATE WITH OWNER.

16 CLEAN WINDOW FRAMES AND GLASS. INSTALL DARK TINTED UV PROTECTION FILM EQUAL TO MIRRORED FILM TINTING BY 3M MODEL # P-18 OVER GLASS PER MANUFACTURE'S RECOMMENDATIONS. INSTALL WINDOW SHADES EQUAL TO TECHMATIC SHADES WITH OPERATORS LOCATED TOWARD CENTER OF ROOM AND NOT OBSTRUCTED BY ABUTTING GYP BOARD WALLS. SEE ROOM FINISH SCHEDULE FOR "SHADES" SELECTION. REFER TO NOTE #40 FOR REQUIREMENTS FOR EXISTING GWB ADJACENT, ABOVE AND BELOW THE WINDOWS.

17 PROVIDE HOSPITAL CUBICAL CURTAIN SYSTEM, INCLUDING TRACK AND ALL NECESSARY HARDWARE FOR A COMPLETE INSTALLATION EQUAL TO THE PRODUCTS OF IMPERIAL FASTENER COMPANY, MODEL IFC-98 CUBICAL TRACK WITH IFC-100 ROLLER CARRIERS. SEE ROOM FINISH SCHEDULE FOR "CUBICAL CURTAIN FABRIC" MATERIAL SELECTION. CURTAIN SHALL BE PROVIDED WITH #42 (FINE) MESH THAT EXTENDS 18" BELOW CEILING AND THAT IS 70% OPEN AND SHALL HANG TO 6" ABOVE FINISH FLOOR PER NFPA 13 SECTION 8.6.5.2.2. CURTAIN LENGTH SHALL BE BASED ON A 30% GATHER FACTOR. PROVIDE TIE BACK(S) AT DRESSING ROOM. PROVIDE SURFACE MOUNTED TRACK THAT IS DESIGNED TO MOUNT DIRECTLY TO CEILING. COLOR SHALL BE WHITE. INSTALL PER RECOMMENDATIONS OF MANUFACTURER.

18 INSTALL DOOR BELL SYSTEM PER ELECTRICAL DRAWINGS. NOTE THAT THERE ARE TWO DOOR BELLS REQUIRED AND EACH SHOULD HAVE A DISTINCT RING. MOUNT ADJACENT TO POWER DOOR PADDLE AS APPLICABLE (REFER TO DTL 9C/A4).

19 12" WIDE WRITING SURFACE PER DETAIL 9F/A5. REFER TO INTERIOR ELEVATIONS.

20 ALIGN NEW WALL WITH JAMB OF EXISTING STOREFRONT FRAMING PER DIMENSION PLAN. PROVIDE BREAK METAL MATCHING STOREFRONT TO COVER END OF WALL IN FINISHED AREAS.

21 SECURITY SWITCH FOR ENTRY DOOR. REFER TO DETAIL 9C/A4.

22 INSTALL DOUBLE HEAVY GAUGE BUCK STUDS AT THE BOTH JAMBS OF DOOR FRAME AND EXTEND CONTINUOUS FROM FLOOR SLAB TO ROOF STRUCTURE ABOVE. PROVIDE 45 DEGREE LATERAL BRACING FROM JUST ABOVE CEILING TO ROOF STRUCTURE ABOVE RUNNING PERPENDICULAR TO THE DIRECTION OF WALL IN BOTH DIRECTIONS.

23 BULKHEAD ABOVE PER DETAIL 8E/A5. BULKHEAD HEIGHT AT 7'-6" AT "SIM" LOCATIONS. REFER TO REFLECTED CEILING PLAN.

24 LOCATE CONTROLS FOR THE PROCEDURE ROOM HVAC UNITS IN THIS AREA. COORDINATE WITH MECHANICAL PLANS

25 INSTALL OWNER PROVIDED LOCKING MEDICINE CABINET INSIDE CABINET. COORDINATE WITH OWNER.

26 PATIENT TABLE AND EQUIPMENT. ELECTRICAL OUTLETS, LIGHTS AND OXYGEN SYSTEM ARE LAID OUT BASED ON THIS EQUIPMENT ARRANGEMENT. CONTRACTOR SHALL VERIFY WITH ARCHITECT/OWNER PRIOR TO WORK IN THIS AREA FOR ANY CHANGES TO THIS ARRANGEMENT.

27 REFER TO CEILING PLAN AND LIGHT FIXTURE DETAIL FOR INSTALLATION OF SUPPORT FOR OWNER PROVIDED/CONTRACTOR INSTALLED OVERHEAD PROCEDURE LIGHT. REFER TO ELECTRICAL FOR WIRING REQUIREMENTS.

28 PROVIDE FIRE EXTINGUISHER AND CABINET. CABINET SHALL BE ACADEMY #1027-W-10 AS PRODUCED BY J.L. INDUSTRIES, BLOOMINGTON, MN. FIRE EXTINGUISHER SHALL BE "COSMIC 10E" AS PRODUCED BY J.L. INDUSTRIES, BLOOMINGTON, MN. MOUNT SUCH THAT THE CENTERLINE OF FULL HANDLE IS AT 36" ABOVE FINISH FLOOR, VERIFY WITH LOCAL CODE AUTHORITIES PRIOR TO INSTALLATION.

29 PROVIDE KEY BOX EQUAL TO MMF INDUSTRIES HIGH-SECURITY LOCKING KEY CABINET, 60-KEY, 12 1/8"H X 10 1/2"W X 3"D AVAILABLE FROM OFFICE DEPOT; ITEM # 307280 (http://www.officedepot.com/ddSKU.do?level=SK&id=307280) TO BE MOUNTED TO THE WALL WHERE INDICATED. PROVIDE 60 "SLOTTED RACK-STYLE SNAP-HOOK KEY TAGS - WHITE". ALL KEYS, INCLUDING LOCKER AND CABINET KEYS SHALL BE HUNG IN THIS CABINET BY THE CONTRACTOR WITH TYPED PERMANENT LABELS ON KEYS AND CORRESPONDING HANGING LOCATION IN BOX.

30 DRINKING FOUNTAIN. REFER TO MECHANICAL. COORDINATE WITH PERMIT OFFICE SUCH THAT INSTALLED UNIT MEETS LOCAL HC REQUIREMENTS.

31 REFER TO INTERIOR ELEVATIONS FOR CABINET WORK AT SINK. FINISH ENDS ON ADJOINING CABINETS. EXTEND FLOORING AND BASE INTO SINK AREA. PIPING TO BE INSTALLED TO MEET ADA CLEARANCE REQUIREMENTS SIMILAR TO DETAIL 9C/A5.

32 INSTALL MINIMUM 6 MIL POLY VAPOR BARRIER BEHIND GYP BOARD AROUND PERIMETER OF ROOM INCLUDING ALL WALLS AND CEILING. POLY TO BE "BEHIND" LEAD SHIELDING WHERE APPLICABLE.

33 2-2x6 BOARD ACROSS BACK WALL. REFER TO DETAIL ON OXYGEN PLAN - SHEET A6. INSTALL HOOKS AND CHAIN TO HOLD OXYGEN TANKS IN PLACE. COORDINATE WITH OWNER FOR THE INSTALLATION OF FLOOR PROTECTION MAT BELOW TANKS.

34 INSTALL OWNER PROVIDED HC TOILET SIGNAGE. SIGN TO BE MOUNTED 5'-0" AFF TO CENTER OF SIGN AND EDGE OF SIGN SHALL BE 2" FROM DOOR FRAME.

35 FEATURE WALL - STONE WALL - "ST-1". STONE VENEER WALL FROM FINISH FLOOR TO 6" ABOVE CEILING. STONE TO BE INSTALLED OVER 5/8" DURAROCK BOARD AND PER MANUFACTURE'S RECOMMENDATIONS. COORDINATE INSTALLATION OF OWNER PROVIDED GRAPHIC SIGNAGE TO BE MOUNTED TO STONE.

36 PROVIDE 8'X3/4" BC PLYWOOD MOUNTING BOARD FROM 6" ABOVE FINISH FLOOR FOR FULL LENGTH OF WALL. PAINT TO MATCH ADJACENT WALLS.

37 REMOVE EXISTING STOREFRONT IN THIS AREA. TURN REMOVED STOREFRONT / DOORS OVER TO LANDLORD. PROVIDE NEW STOREFRONT SYSTEM TO MATCH EXISTING STOREFRONT SYSTEM EXCEPT THAT 1" INSULATED GLASS WITH UV PROTECTION SHALL BE INSTALLED. INSTALL NEW DOOR WHERE APPLICABLE PER DOOR SCHEDULE. DOOR TO MATCH EXISTING. REFER TO NOTE #16 FOR ADDITIONAL REQUIREMENTS, INCLUDING ROLLER SHADES.

38 NEW ROOFTOP EXHAUST FAN. REFER TO MECHANICAL PLANS FOR LOCATION AND SETTING REQUIREMENTS. CURB TO BE WORKED INTO EXISTING ROOFING PER ROOFING MANUFACTURE'S RECOMMENDATIONS TO MAINTAIN EXISTING ROOFING WARRANTY. COORDINATE WITH LANDLORD AND USE LANDLORD'S ROOFING COMPANY IF REQUIRED BY EXISTING ROOFING WARRANTY.

39 APPROXIMATE LOCATION OF NEW ROOF TOP UNIT AND NEW DUCT PENETRATIONS PER MECHANICAL DRAWINGS. CONTRACTOR TO CONFIRM WITH LANDLORD'S STRUCTURAL ENGINEER THAT NEW UNITS AND INDICATED LOCATIONS ARE ACCEPTABLE. REFER TO MECHANICAL PLANS FOR SETTING, PIPING AND INSTALLATION OF THIS UNIT. PROVIDE CURB AND FLASH INTO ROOFING PER ROOFING MANUFACTURE'S STANDARD ROOFING DETAILS AND RECOMMENDATIONS. COORDINATE WITH LANDLORD TO INSURE EXISTING ROOFING WARRANTY IS MAINTAINED.

40 EXISTING WALL TO REMAIN. REFER TO FOLLOWING SUFFIX FOR REQUIREMENTS. SEE WALL SCHEDULE FOR OTHER WALL REQUIREMENTS.

a. TENANT REQUIRES A ONE HOUR FIRE RATED WALL TO SEPARATE THEIR TENANT AREA FROM OTHER AREAS OF THE BUILDING, INCLUDING OTHER TENANTS AND HALLWAY. REFER TO DIMENSION PLAN FOR LOCATION AND REQUIREMENTS FOR A NEW FULL HEIGHT ONE HOUR FIRE WALL, INCLUDING THE CONCEALED PARTITION MARKING REQUIREMENTS. ALL NEW WORK TO BE DONE TO MAINTAIN 1 HOUR FIRE RATING. WALL ON SIDE OF ADJACENT TENANT SHALL BE TAPED / FLOATED AND READY FOR PAINT. NO FINISH PAINTING IS REQUIRED ON THE ADJACENT TENANT SIDE OF THIS WALL.

b. EXISTING EXTERIOR WALL. FOLLOWING INSTALLATION OF NEW ELECTRICAL WORK, PLUMBING AND BLOCKING RESTORE EXISTING INSULATION AND PATCH EXISTING GYPBOARD (USE MOISTURE BOARD IN WET LOCATIONS). BLEND NEW WORK WITH EXISTING WORK FOR A SMOOTH UNIFORM APPEARANCE.

c. REMOVE EXISTING GYP BOARD IN THE AREA OF THE PROCEDURE ROOMS AND INSTALL NEW 5/8" GYPBOARD WITH 1/16" LEAD BACKING. REFER TO SHEET A2, DIMENSION PLAN. TIE THIS LEAD INTO THE LEAD OF THE ADJACENT WALLS TO CREATE A COMPLETE BARRIER.

41 EXTEND WALL LEAD (1/16" SHEET LEAD TO 7'-0" AFF) BEHIND RETURN AIR DUCT CHASE AND TIE LEAD INTO LEAD LINED GYP BOARD FOR A CONTINUOUS BARRIER.

42 REFER TO MECHANICAL DRAWINGS FOR LOW RETURN AIR DUCT AND 18"X30" RETURN AIR GRILL TO BE MOUNTED WITH BOTTOM 6" AFF.

43 ELECTRICAL PANELS PER ELECTRICAL DRAWINGS. PANELS TO HAVE ENGRAVED PERMANTATE PLASTIC LABELS

44 REFER TO ELEVATIONS 2A/A5 FOR PLAS LAMINATE WALL PROTECTION UNDER COUNTERTOP.

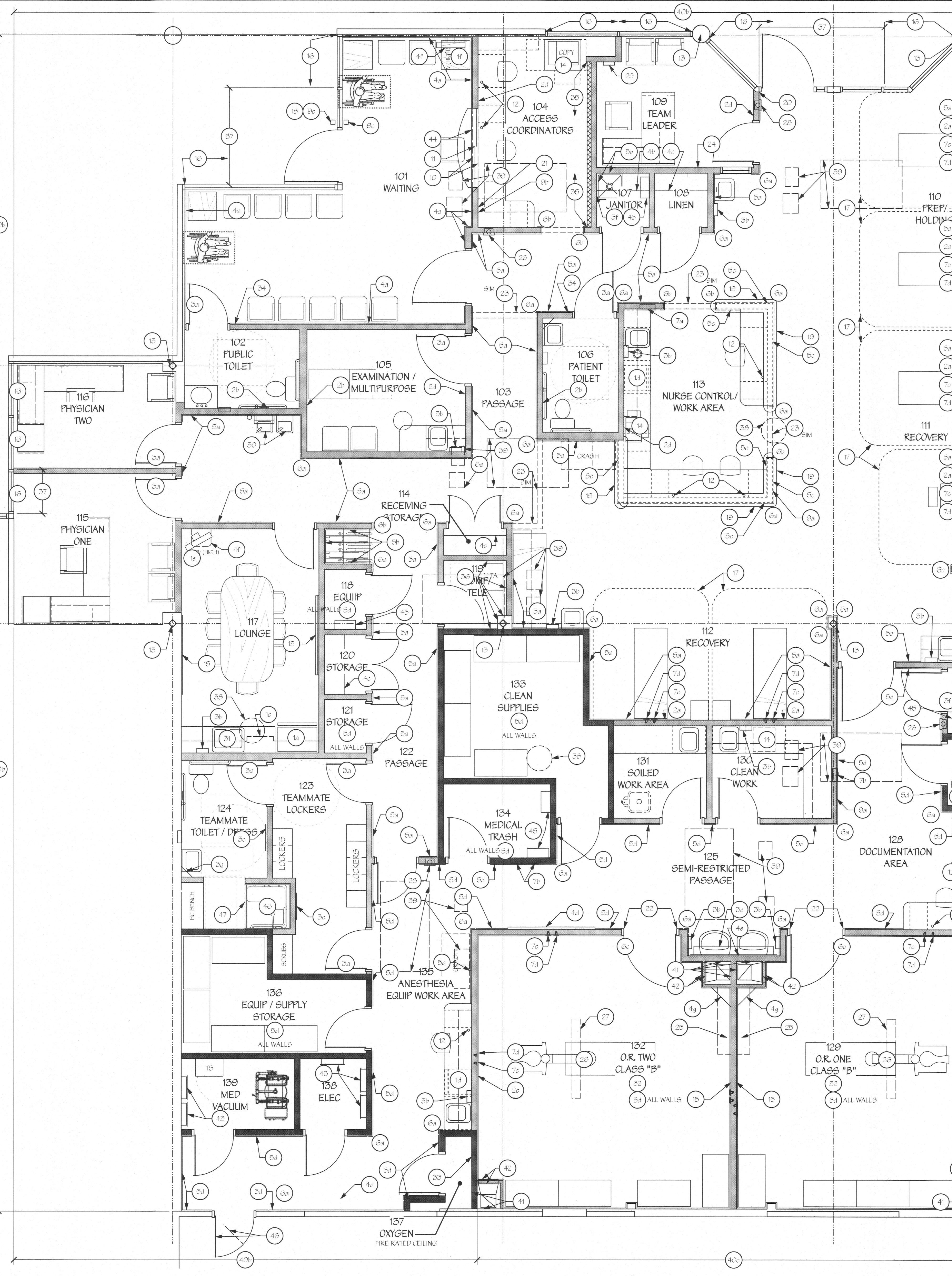

45 REFER TO MECHANICAL DRAWINGS FOR NEW HUMIDIFIER IN THIS AREA. HOLD UNIT AS HIGH AS POSSIBLE. INSTALL TO ALLOW ACCESS TO FILTERS AND FOR MAINTANCE.

46 REFER TO MECHANICAL PLANS FOR SHOWER. CAREFULLY CHIP AWAY EXISTING CONCRETE DECK AS REQUIRED TO INSTALL SHOWER UNIT TO MEET ADA/HC REQUIREMENTS (MAX 1/2" THRESHOLD) AND PATCH SLAB WITH EQUAL THICKNESS 3,000 PSI CONCRETE. COORDINATE GYP BOARD WALL ENCLOSURE DIMENSIONS WITH ROUGH-IN DIMENSIONS FOR SHOWER UNIT.

47 PROVIDE A WHITE SHOWER CURTAIN, WITH PLASTIC RINGS, AT HC SHOWER.

48 REFER TO FLOOR PLAN FOR NEW DOOR TO REPLACE EXISTING DOOR. PAINT EXTERIOR SIDE OF DOOR AND FRAME TO MATCH OTHER EXISTING DOORS AND PATCH EXISTING ADJACENT SURFACES AS REQUIRED TO BLEND NEW WORK INTO EXISTING. COORDINATE WITH LANDLORD FOR THEIR APPROVAL.

9F / A3 FLOOR PLAN - CONSTRUCTION NOTES
Scale: 1/4" = 1'-0"

NOTE; CONTRACTOR AND SUB-CONTRACTORS SHALL VISIT THIS BUILDING AND TENANT AREA AND BE FAMILIAR WITH ALL THE EXISTING CONDITIONS PRIOR TO CONTRACT AWARD

ISSUED FOR ARIZONA STATE ASC PLAN REVIEW

dpce don penn □ consulting engineer
635 Westport Parkway Suite 300 Grapevine, Texas 76051 Phone: 817-410-2858 Fax: 817-251-8411

TENANT RENOVATIONS FOR:
LIFELINE Access Center
325 S. Euclid Ave, Suite 109 Tucson, AZ 85719

Lifeline Vascular Access

InSync ARCHITECTURAL DESIGNS, INC.
1213 Old Fylesville Road Whiteford, MD 21160 Office 410-452-8006 Fax 410-452-8046

REGISTERED ARCHITECT CERTIFICATE NO. 43189 STEPHANIE FANTL DATE SIGNED ARIZONA, U.S.A. 1/19/17

0"	1"	2"	3"
1/8"=1'-0"	8'	16'	24'
1/4"=1'-0"	4'	8'	12'

FLOOR PLAN - CONSTRUCTION NOTES

REVISIONS

REV#	DATE	DESCRIPTION
#1	6/29/16	PERMIT REVIEW COMMENTS
	1/6/17	ARIZONA STATE ASC PLAN REVIEW

DRAWING NO. A3
SHEET OF
DATE 4/13/16 DRAWN BY BFC
JOB NUMBER 11222 CHECKED BY KDP

DOOR AND FRAME SCHEDULE:

Frame #	Door Width	Door Ht	Door Thick	Door Type	Door Matl	Door Fin	Louver	Frame Type	Frame Matl	Frame Depth	Hardware	Fire Rating	Remark
101a	4'-0"	EXIST	EXIST	ALFG	ALUM	MATCH EX	-	A	ALUM	EXIST	A	-	MATCH EX - NOTE #1
101b	4'-0"	7'-0"	1 3/4"	SL	EC-WD	STAINED	-	01	HM	5 7/8"	B	-	FROSTED GLASS, OTHER FULL SIDE
102	3'-0"	7'-0"	1 3/4"	F	EC-WD	STAINED	-	01	HM	5 7/8"	F	-	UNDERCUT 1"
103	3'-0"	7'-0"	1 3/4"	F	EC-WD	STAINED	-	01	HM	5 7/8"	F	-	UNDERCUT 1"
106	3'-0"	7'-0"	1 3/4"	F	EC-WD	STAINED	-	01	HM	5 7/8"	D	-	UNDERCUT 1"
107	3'-0"	7'-0"	1 3/4"	F	EC-WD	STAINED	-	01	HM	5 7/8"	D	-	UNDERCUT 1"
108	3'-0"	7'-0"	1 3/4"	F	EC-WD	STAINED	-	01	HM	5 7/8"	D	-	UNDERCUT 1"
108a	3'-0"	7'-0"	1 3/4"	HG	EC-WD	STAINED	-	01	HM	5 7/8"	C	-	-
108b	-	-	-	-	-	-	-	04	HM	5 7/8"	-	-	-
110	4'-0"	EXIST	EXIST	ALFG	ALUM	MATCH EX	-	A	ALUM	EXIST	K	-	MATCH EX - NOTE #1
114	2@2'-0"	7'-0"	1 3/4"	F	EC-WD	STAINED	-	01	HM	5 7/8"	L	-	-
115	3'-0"	7'-0"	1 3/4"	F	EC-WD	STAINED	-	01	HM	5 7/8"	C	-	-
116	3'-0"	7'-0"	1 3/4"	F	EC-WD	STAINED	-	01	HM	5 7/8"	C	-	-
117	3'-0"	7'-0"	1 3/4"	FG	EC-WD	STAINED	-	01	HM	5 7/8"	D	-	SMOKED GLASS
118	3'-0"	7'-0"	1 3/4"	F	EC-WD	STAINED	-	01	HM	5 7/8"	C	-	UNDERCUT 1"
119	3'-0"	7'-0"	1 3/4"	F	EC-WD	STAINED	YES	01	HM	5 7/8"	C	-	2 LOUVERS-12"X24" TOP/BOT
120	2@2'-0"	7'-0"	1 3/4"	F	EC-WD	STAINED	-	01	HM	5 7/8"	L	-	-
121	3'-0"	7'-0"	1 3/4"	F	EC-WD	STAINED	-	01	HM	5 7/8"	D	-	UNDERCUT 1"
123a	3'-0"	7'-0"	1 3/4"	F	EC-WD	STAINED	-	01	HM	5 7/8"	D	-	UNDERCUT 1"
123b	3'-0"	7'-0"	1 3/4"	F	EC-WD	STAINED	-	01	HM	5 7/8"	B	-	UNDERCUT 1", OTHER FULL SIDE
124	3'-0"	7'-0"	1 3/4"	F	EC-WD	STAINED	-	01	HM	5 7/8"	F	-	UNDERCUT 1"
125a	4'-0"	7'-0"	1 3/4"	F	EC-WD	STAINED	-	01	HM	5 7/8"	G	-	-
125b	3'-0"	7'-0"	1 3/4"	SL	EC-WD	STAINED	-	01	HM	5 7/8"	B	-	FROSTED GLASS, OTHER FLUSH SIDE
125c	3'-0" *	7'-0" *	1 3/4"	F	HM	PTD	-	01	HM	MATCH EXIST	M	-	* MATCH EXIST, OPENING SIDE - NOTE #1
126	3'-0"	7'-0"	1 3/4"	F	EC-WD	STAINED	-	01	HM	5 7/8"	D	-	UNDERCUT 1"
127	3'-0"	7'-0"	1 3/4"	F	EC-WD	STAINED	-	02	HM	5 7/8"	E	45 MIN	UNDERCUT 1"
128	4'-0"	7'-0"	1 3/4"	LL	EC-WD	STAINED	-	03	HM	5 7/8"	H	-	1/63" LEAD LINED DR/FRAME
130	3'-0"	7'-0"	1 3/4"	F	EC-WD	STAINED	-	01	HM	5 7/8"	J	-	-
131	3'-0"	7'-0"	1 3/4"	F	EC-WD	STAINED	-	01	HM	5 7/8"	E	-	UNDERCUT 1"
132	4'-0"	7'-0"	1 3/4"	LL	EC-WD	STAINED	-	03	HM	5 7/8"	H	-	1/63" LEAD LINED DR/FRAME
133	3'-0"	7'-0"	1 3/4"	F	EC-WD	STAINED	-	02	HM	5 7/8"	E	45 MIN	-
134	3'-0"	7'-0"	1 3/4"	F	EC-WD	STAINED	-	02	HM	5 7/8"	E	45 MIN	UNDERCUT 1"
136	3'-0"	7'-0"	1 3/4"	F	EC-WD	STAINED	-	02	HM	5 7/8"	E	45 MIN	-
137	3'-0"	7'-0"	1 3/4"	F	EC-WD	STAINED	-	02	HM	5 7/8"	E	45 MIN	DOOR TO HAVE U-FACTOR OF 0.61
138	3'-0"	7'-0"	1 3/4"	F	EC-WD	STAINED	-	02	HM	5 7/8"	E	45 MIN	-
139	3'-0"	7'-0"	1 3/4"	F	EC-WD	STAINED	-	02	HM	5 7/8"	E	45 MIN	-

GENERAL NOTE:
ALL DOORS AND DOOR HARWARE SHALL COMPLY WITH SECTION 404 OF ICC/ANSI 117.1

GENERAL NOTE:
ALL DOOR HARWARE SHALL BE INSTALLED IN ACCORDANCE WITH ADA AND ANSI RECOMMENDATIONS. LEVER LOCKSETS SHALL BE INSTALLED WITH CENTER OF LEVEL HANDLES AT 39" AFF.

NOTE:
ALL NEW EXTERIOR ALUMINUM AND GLASS, INCLUDING THE NEW GLASS ADJACENT TO DOORS 101a AND 110, SHALL MEET THE FOLLOWING:
a. NEW GLAZED ENTRY:
U-FACTOR=0.63 AND SHGC = 0.25
b. NEW FIXED WINDOW WALL:
U-FACTOR=0.50 AND SHGC = 0.25

NEW STOREFRONT TO MATCH EXIST

7'-2"

KEF DOOR SCHED

4 EXTERIOR ALUM STOREFRONT

NOTE #1 - EGRESS DOOR. REFER TO EGRESS DOOR REQUIREMENTS UNDER GENERAL HARWARE NOTES

DOOR TYPES:

NOTE: NEW DOORS SHALL BE STAINED STOP / TRIM FOR GLASS IN DOORS SHALL BE CLEAR ANODIZED ALUM TO MATCH DOOR FRAME

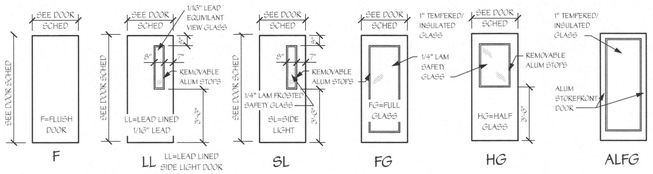

ALL SAFETY GLASS SHALL COMPLY WITH THE CPSC 16 CFR, PART 1201, CRITERIA I AND SHALL BE IN ACCORDANCE WITH SECTION 2406 OF THE USBC.

FRAME TYPES:

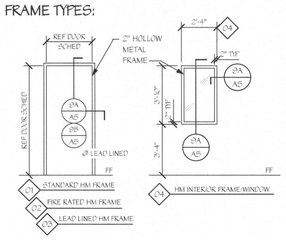

HARDWARE TYPES:

GENERAL HARDWARE NOTE: ALL COMPONENTS OF HARDWARE SHALL BE PROVIDED FOR A COMPLETELY FUNCTIONING HARDWARE INSTALLATION. ALL COMPONENTS SHALL COMPLY WITH LOCAL, STATE AND FEDERAL (ADA) DISABILITY REQUIREMENTS. ALL EGRESS DOORS SHALL BE READILY OPENABLE FROM THE SIDE FROM WHICH EGRESS IS TO BE MADE WITHOUT A KEY OR SPECIAL KNOWLEDGE OR EFFORT. NEW DOORS SHALL BE KEYED TO MATCH THE EXISTING TENANT AND BUILDING KEYING SYSTEM.
ALL LOCKSETS SHALL BE EQUAL TO THE D SERIES, LEVER HANDLE LOCKSETS (US26D FINISH) BY SCHLAGE, ATHENS LEVER DESIGN AND FULL SIZE INTERCHANGEABLE CORES. HARDWARE SHALL BE INSTALLED PER MANUFACTURE'S RECOMMENDATIONS FOR THE VARIOUS CONDITIONS ENCOUNTERED.

TYPE "A" - PROVIDE STOREFRONT MANUFACTURES STANDARD HARDWARE FOR A COMPLETE INSTALLATION TO INCLUDE DEADLATCH HANDLES / CLUNDER EQUAL TO 4690 BY ADAMS RITE, ELECTRIC STRIKE EQUAL TO THE 5200 ELECTRIC STRIKE SERIES BY HES INNOVATIONS WITH 5041A FACE PLATE OPTION TIED INTO DIGITAL KEYPAD DK-3756S WITH DKC CONTROLLER BY SECURITRON WITH ASSOCIATED POWER SUPPLY, POWER TRANSFER AND SECURITRON PB3N PUSH BUTTON FOR ELECTRIC STRIKE (COORDINATE WITH OWNER'S SECURITY COMPANY), HINGES, DOOR STOP, PUSH/PULL DOOR HARDWARE, FULL WEATHER-STRIPPING AND ADA APPROVED ALUMINUM THRESHOLD. INSTALL PER MANUFACTURE'S RECOMMENDATIONS. PROVIDE MAGIC-FORCE AUTOMATIC POWER OPENER, BY STANLEY, (COORDINATE TIMING WITH OWNER). REFER TO FLOOR PLAN FOR REQUIRED CONTROL FADDLE LOCATIONS AND TO DETAIL 8/A4 FOR DOOR CONTROL DIAGRAM / REQUIREMENTS, INCLUDING SECURITY SWITCH FOR THE ELECTRIC STRIKE.

TYPE "B" - CYPHER LOCK EQUAL TO TRILOGY DL2775 BY ALARM LOCK. LOCK SHALL BE PROVIDED WITH PASSAGE MODE/FUNCTION, CORBIN DC3200 SERIES SURFACE APPLIED DELAYED ACTION DOOR CLOSER (COORDINATE TIMING WITH OWNER), 4 1/2" BUTT HINGES (MINIMUM 3 PER LEAF) BY STANLEY, WALL STOP BY ROCKWOOD.

TYPE "C" - FUNCTION ND50FD (OFFICE FUNCTION), 4 1/2" BUTT HINGES (MINIMUM 3 PER LEAF) BY STANLEY, WALL STOP BY ROCKWOOD.

TYPE "D" - FUNCTION ND10S (PASSAGE FUNCTION), 4 1/2" BUTT HINGES (MINIMUM 3 PER LEAF) BY STANLEY, WALL STOP BY ROCKWOOD.

TYPE "E" - FUNCTION ND50FD (OFFICE FUNCTION), CORBIN DC3200 SERIES SURFACE APPLIED DOOR CLOSER, 4 1/2" BUTT HINGES (MINIMUM 3 PER LEAF) BY STANLEY, WALL STOP BY ROCKWOOD.

TYPE "F" - FUNCTION ND40S (PRIVACY FUNCTION), 4 1/2" BUTT HINGES (MINIMUM 3 PER LEAF) BY STANLEY, WALL STOP BY ROCKWOOD.

TYPE "G" - PUSH PLATE "10D" BY LINDSTROM ON "PUSH" SIDE AND PULL PLATE "10DN8D" BY LINDSTROM ON "PULL" SIDE OF DOOR, KICKPLATE #37 16"X46" US26D BY BALDWIN HARDWARE CORP ON BOTH SIDES OF LEAF, MAGIC FORCE (BY STANLEY) POWER ASSISTED POWER CLOSURE, 4 1/2" BUTT HINGES (MINIMUM 3 PER LEAF) BY STANLEY, WALL STOP BY ROCKWOOD. POWER OPENER SHALL BE PROVIDED WITH OPTION THAT ACTIVATES OPENER WHEN LEAF IS OPENED MANUALLY. COORDINATE OPENING SPEED SETTINGS WITH OWNER. REFER TO PLAN AND NOTE #3a FOR LOCATION OF PUSH PADDLES TO OPERATE AUTOMATIC DOOR OPENER.

TYPE "H" - PROVIDE PUSH/PULL LATCH EQUAL TO HL-6 PUSH/PULL LATCH BY GLYNN-JOHNSON (US26PFINISH) IN MOUNTING POSITION "C" WITH 5" BACKSET AND KEYED DEAD BOLT WITH INTERIOR THUMB TURN MOUNTED ABOVE (CAREFULLY COORDINATE MOUNTING HEIGHTS WITH OWNER), 147 PIVOT SET WITH M10 INTERMEDIATE PIVOT BY KNSON PER LEAF, HEAVY DUTY DOOR CLOSURE WITH HOLD OPEN OPTION - CORBIN RUSSWIN CD3200 X A1 HOLDOPEN 689 X LEAD LINED COVER, KICKPLATE #37 16"X46" US26D BY BALDWIN HARDWARE CORP ON EACH SIDE OF DOOR, WALL STOP BY ROCKWOOD.

TYPE "J" - FUNCTION ND10S (PASSAGE FUNCTION), CORBIN DC3200 SERIES SURFACE APPLIED DOOR CLOSER, 4 1/2" BUTT HINGES (MINIMUM 3 PER LEAF) BY STANLEY, WALL STOP BY ROCKWOOD.

TYPE "K" - PROVIDE STOREFRONT MANUFACTURES STANDARD HARDWARE FOR A COMPLETE INSTALLATION TO INCLUDE DEADLATCH HANDLES / CLUNDER EQUAL TO 4690 BY ADAMS RITE, ELECTRIC STRIKE EQUAL TO THE 5200 ELECTRIC STRIKE SERIES BY HES INNOVATIONS WITH 5041A FACE PLATE OPTION TIED INTO DIGITAL KEYPAD DK-3756S WITH DKC CONTROLLER BY SECURITRON WITH ASSOCIATED POWER SUPPLY, POWER TRANSFER AND SECURITRON PB3N PUSH BUTTON FOR ELECTRIC STRIKE (COORDINATE WITH OWNER'S SECURITY COMPANY), HEAVY DUTY CLOSURE, HINGES, DOOR STOPS, PUSH/PULL DOOR HARDWARE, FULL WEATHER-STRIPPING AND ADA APPROVED ALUMINUM THRESHOLD. INSTALL PER MANUFACTURE'S RECOMMENDATIONS.

TYPE "L" - DUMMY TRIM ON EACH LEAF WITH HEAVY DUTY MAGNETIC CATCHES AT THE TOP OF EACH LEAF, 4 1/2" BUTT HINGES (MINIMUM 3 PER LEAF) AND WALL STOPS.

TYPE "M" - 8300 SERIES EXIT DEVICE WITH EXTERIOR KEYED CYLINDER BY ADAMS RITE, CORBIN EXTERIOR GRADE SURFACE APPLIED DOOR CLOSER, 4 1/2" BUTT HINGES (MINIMUM 3 PER LEAF) BY STANLE, WEATHERSTRIPPING AND ADA ALUMINIUM THRESHOLD.

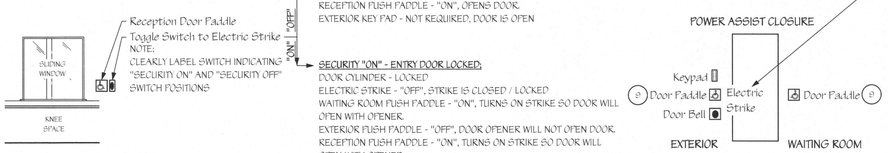

RECEPTION OFFICE WINDOW INTO WAITING

SECURITY "OFF" - ENTRY DOOR UNLOCKED:
DOOR CYLINDER - LOCKED
ELECTRIC STRIKE - "ON", STRIKE IS OPEN
WAITING ROOM PUSH PADDLE - "ON", OPENS DOOR.
EXTERIOR PUSH PADDLE - "ON", OPENS DOOR.
RECEPTION PUSH PADDLE - "ON", OPENS DOOR.
EXTERIOR KEY PAD - NOT REQUIRED, DOOR IS OPEN

SECURITY "ON" - ENTRY DOOR LOCKED:
DOOR CYLINDER - LOCKED
ELECTRIC STRIKE - "OFF", STRIKE IS CLOSED / LOCKED
WAITING ROOM PUSH PADDLE - "ON", TURNS ON STRIKE SO DOOR WILL OPEN WITH OPENER.
EXTERIOR PUSH PADDLE - "OFF", DOOR OPENER WILL NOT OPEN DOOR.
RECEPTION PUSH PADDLE - "ON", TURNS ON STRIKE SO DOOR WILL OPEN WITH OPENER.
EXTERIOR KEY PAD - TURNS ON STRIKE SO DOOR CAN BE PULLED OPEN.

NOTE: THE ELECTRIC STRIKE SHALL "FAIL" IN THE LOCKED "OFF" POSITION, SO, AT THE LOSS OF POWER, THIS DOOR WILL BE LOCKED FROM THE EXTERIOR. THE EGRESS LATCH WILL ALLOW DOOR TO BE OPENED FROM THE WAITING ROOM SIDE.

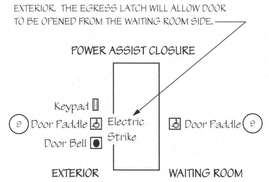

MAIN PATIENT ENTRY DOOR

5C A4 EXTERIOR DOORS CONTROL DIAGRAMS
Scale: 1/4" = 1'-0"

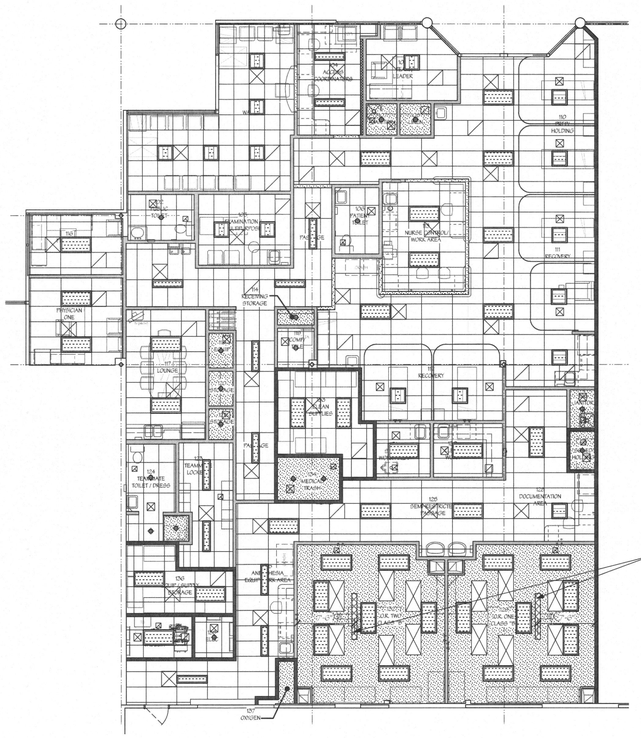
NURSE STATION
RECOVERY
PHYSICIAN ONE
LOUNGE
TEAM ROOM
MEDICAL CONSULTANTS
TELEMETRY
CLEAN UTILITY
TELEMETRY
TOILET / DRESS
DOCUMENTATION
CLEAN/SOILED UTILITY
ANCILLARY AREA
CONSULTATION
CONSULTATION
CONSULTATION

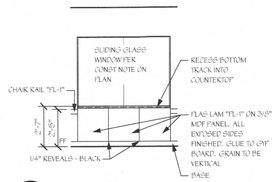

2A / A5 **101 TRANSACTION WINDOW**
Scale: 1/4" = 1'-0"
COUNTERTOPS - FEATURE COUNTERTOP
STONE SLAB - GRANITE "ST-2"

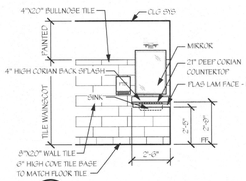

2B / A5 **102 PUBLIC TOILET**
Scale: 1/4" = 1'-0"
COUNTERTOPS - FEATURE COUNTERTOP
SOLID SURFACE "CT-3"

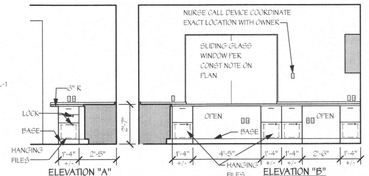

2C / A5 **104 RECEPTION**
Scale: 1/4" = 1'-0"
FLASTIC LAMINATE COLORS:
CABINETS - "FL-1",
COUNTERTOPS - "FL-2"

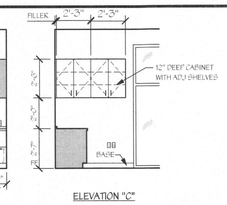

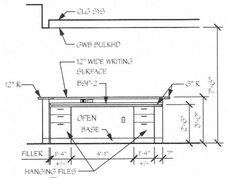

2E / A5 **113 NURSE WORK**
Scale: 1/4" = 1'-0"
FLASTIC LAMINATE COLORS:
CABINETS - "FL-1",
COUNTERTOPS - "FL-2"

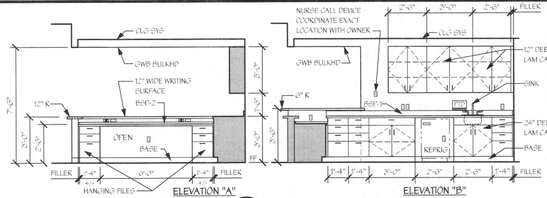

2F / A5 **113 NURSE WORK**
Scale: 1/4" = 1'-0"
FLASTIC LAMINATE COLORS:
CABINETS - "FL-1",
COUNTERTOPS - "FL-2"

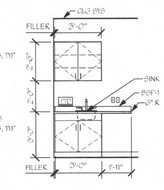

2G / A5 **105 EXAMINATION / MULTIFURPOSE**
Scale: 1/4" = 1'-0"
FLASTIC LAMINATE COLORS:
CABINETS - "FL-1",
COUNTERTOPS - "FL-2"

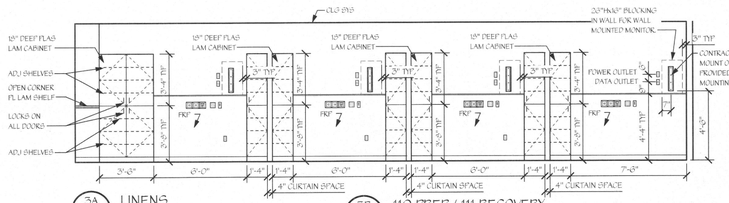

3A / A5 **LINENS**
Scale: 1/4" = 1'-0"
FLASTIC LAMINATE COLORS:
CABINETS - "FL-1",
COUNTERTOPS - "FL-2"

3B / A5 **110 PREP / 111 RECOVERY**
Scale: 1/4" = 1'-0"
FLASTIC LAMINATE COLORS:
CABINETS - "FL-1",
COUNTERTOPS - "FL-2"

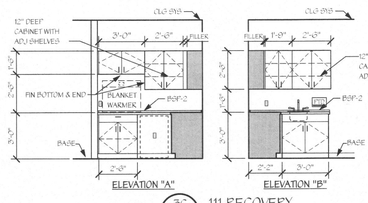

3C / A5 **111 RECOVERY**
Scale: 1/4" = 1'-0"
FLASTIC LAMINATE COLORS:
CABINETS - "FL-1",
COUNTERTOPS - "FL-2"

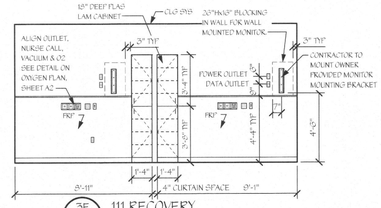

3E / A5 **111 RECOVERY**
Scale: 1/4" = 1'-0"
FLASTIC LAMINATE COLORS:
CABINETS - "FL-1",
COUNTERTOPS - "FL-2"

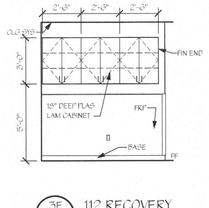

3F / A5 **112 RECOVERY**
Scale: 1/4" = 1'-0"
FLASTIC LAMINATE COLORS:
CABINETS - "FL-1",
COUNTERTOPS - "FL-2"

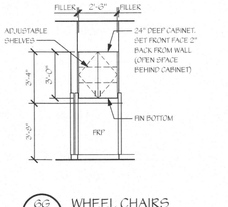

GG / A5 **WHEEL CHAIRS**
Scale: 1/4" = 1'-0"
FLASTIC LAMINATE COLORS:
CABINETS - "FL-1",
COUNTERTOPS - "FL-2"

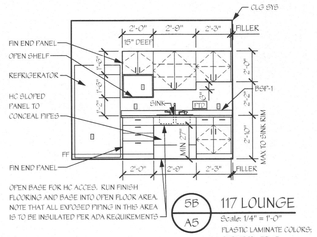

5B / A5 **117 LOUNGE**
Scale: 1/4" = 1'-0"
FLASTIC LAMINATE COLORS:
CABINETS - "FL-1",
COUNTERTOPS - "FL-2"

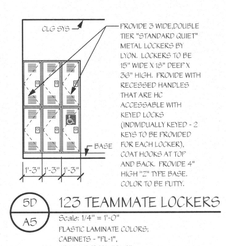

5D / A5 **123 TEAMMATE LOCKERS**
Scale: 1/4" = 1'-0"
FLASTIC LAMINATE COLORS:
CABINETS - "FL-1",
COUNTERTOPS - "FL-2"

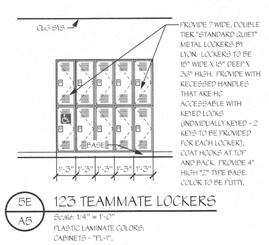

5E / A5 **123 TEAMMATE LOCKERS**
Scale: 1/4" = 1'-0"
FLASTIC LAMINATE COLORS:
CABINETS - "FL-1",
COUNTERTOPS - "FL-2"

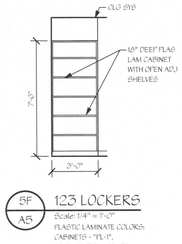

5F / A5 **123 LOCKERS**
Scale: 1/4" = 1'-0"
FLASTIC LAMINATE COLORS:
CABINETS - "FL-1",
COUNTERTOPS - "FL-2"

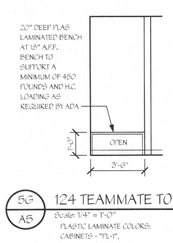

5G / A5 **124 TEAMMATE TOILET**
Scale: 1/4" = 1'-0"
FLASTIC LAMINATE COLORS:
CABINETS - "FL-1",
COUNTERTOPS - "FL-2"

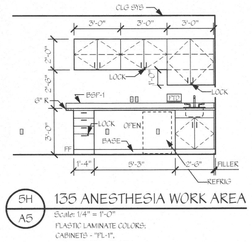

5H / A5 **135 ANESTHESIA WORK AREA**
Scale: 1/4" = 1'-0"
FLASTIC LAMINATE COLORS:
CABINETS - "FL-1",
COUNTERTOPS - "FL-2"

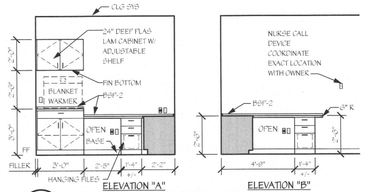

GA / A5 **128 DOCUMENTATION WORK AREA**
Scale: 1/4" = 1'-0"
FLASTIC LAMINATE COLORS:
CABINETS - "FL-1",
COUNTERTOPS - "FL-2"

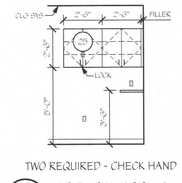

TWO REQUIRED - CHECK HAND

GB / A5 **BOTH O.R. ROOMS**
Scale: 1/4" = 1'-0"
FLASTIC LAMINATE COLORS:
CABINETS - "FL-1",
COUNTERTOPS - "FL-2"

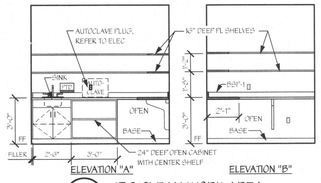

GD / A5 **130 CLEAN WORK AREA**
Scale: 1/4" = 1'-0"
FLASTIC LAMINATE COLORS:
CABINETS - "FL-1",
COUNTERTOPS - "FL-2"

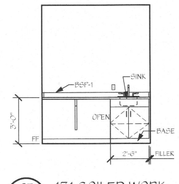

GE / A5 **131 SOILED WORK**
Scale: 1/4" = 1'-0"
FLASTIC LAMINATE COLORS:
CABINETS - "FL-1",
COUNTERTOPS - "FL-2"

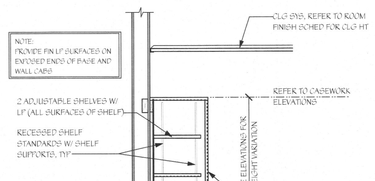

GF / A5 **TYPICAL CASEWORK SECTION**
Scale: 3/4" = 1'-0"

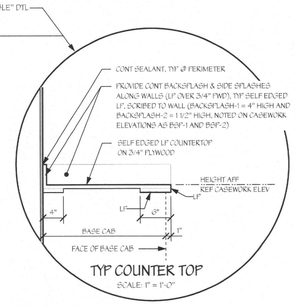

TYP COUNTER TOP
SCALE: 1" = 1'-0"

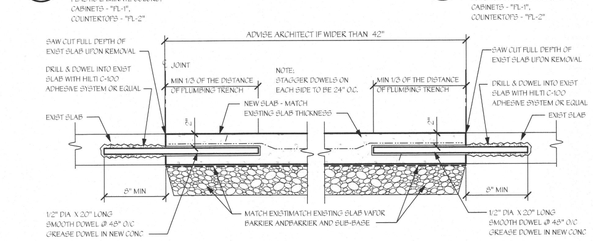

7A / A5 **FLUMING TRENCH SLAB POUR BACK DETAIL**
Scale: 1 1/2" = 1'-0"

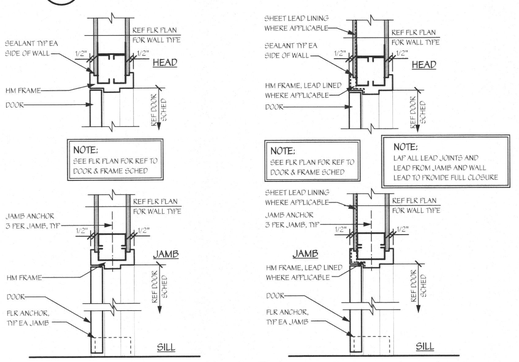

9A / A5 **TYP HM FRAME @ GYP**
Scale: 1 1/2" = 1'-0"

9B / A5 **TYP LEAD LINED HM FRAME @ GYP**
Scale: 1 1/2" = 1'-0"

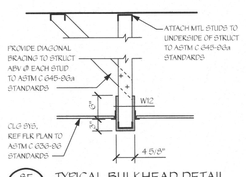

9E / A5 **TYPICAL BULKHEAD DETAIL**
Scale: 3/4" = 1'-0"

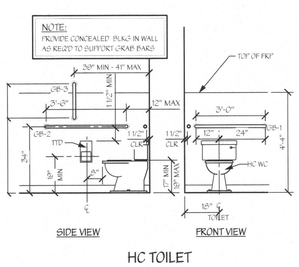

9C / A5 **TYPICAL HC TOILET ROOM DETAILS**
Scale: 3/8" = 1'-0"

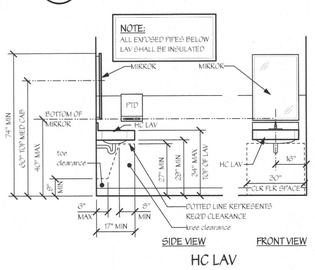

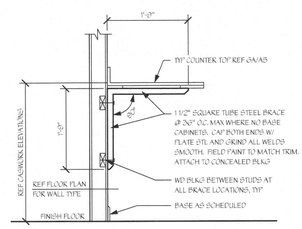

9E / A5 **TYPICAL COUNTERTOP SUPPORT**
Scale: 3/4" = 1'-0"

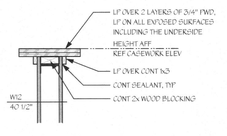

9F / A5 **WRITING SURFACE**
Scale: 1" = 1'-0"

NOTE; CONTRACTOR AND SUB-CONTRACTORS SHALL VISIT THIS BUILDING AND TENANT AREA AND BE FAMILIAR WITH ALL THE EXISTING CONDITIONS PRIOR TO CONTRACT AWARD

ISSUED FOR ARIZONA STATE ASC PLAN REVIEW

dpce
don penn ▫ consulting engineer
635 Westport Parkway
Suite 300
Grapevine, Texas 76051
Phone: 817-410-2858
Fax: 817-251-8411

TENANT RENOVATIONS FOR:
LIFELINE
Access Center
325 S. Euclid Ave, Suite 109
Tucson, AZ 85719

Lifeline Vascular Access

InSync
ARCHITECTURAL DESIGNS, INC.
1213 Old Fallsville Road
Whiteford, MD 21160
Office 410-452-8036
Fax 410-452-8046

REGISTERED ARCHITECT
43185
STEPHANIE FANTZ
ARIZONA U.S.A.

0" 1" 2" 3"
1/8"=1'-0" 8' 16' 24'
1/4"=1'-0" 4' 8' 12'

INTERIOR ELEVATIONS AND DETAILS

REVISIONS		
KEV#	DATE	DESCRIPTION
#1	8/29/16	PERMIT REVIEW COMMENTS
	1/6/17	ARIZONA STATE ASC PLAN REVIEW

DRAWING NO. A5
SHEET OF
DATE 4/13/16
DRAWN BY PFC
JOB NUMBER 11222
CHECKED BY KDP

A B C D E F G H
1 2 3 4 5 6 7 8 9

OXYGEN & VACUUM SYSTEM NOTES

◇ DESIGNATES A OXYGEN / VACUUM SYSTEM NOTE

GENERAL NOTE - INSTALL 18 GAUGE CONTROL WIRING PER MANUFACTURE'S REQUIREMENTS/RECOMMENDATIONS BETWEEN PRESSURE/VACUUM SWITCHES, MANIFOLD, CONTROL PANEL AND MASTER ALARM PANEL AND AREA ALARM PANEL LOCATIONS.

1 OXYGEN MANIFOLD. UNIT SHALL BE OHIO MEDICAL CORPORATION MODEL #283432-02 WITH A 2X2 HEADER BAR, 1/2" RELIEF VALVE (SET AT 75psig) #232600 AND PIPE AWAY FOR RELIEF VALVE #232602. FULLY AUTOMATIC MANIFOLD SHALL HAVE A NEMA 4X ENCLOSURE AND BE UL LISTED. PRESSURE CONTROL CABINET SHALL CONTAIN DUAL PRESSURE REGULATORS AND SWITCHES THAT INSURE AN UNINTERRUPTED FLOW OF GAS TO THE PIPELINE. THE CABINET SHALL HAVE THREE PRESSURE GAUGES, ONE FOR EACH SUPPLY SIDE AND ONE FOR PIPELINE DELIVERY. IT SHALL BE AUTOMATIC SWITCH, HEADER BARS SHALL BE MODULAR IN DESIGN, ALLOWING FOR FUTURE EXPANSION. EACH INLET PORT SHALL BE EQUIPPED WITH AN INDIVIDUAL CHECK VALVE. HEADER BAR SHALL INCLUDE A MASTER SHUTOFF VALVE.

2 HEADER BAR ON EACH SIDE OF MANIFOLD PER NOTE 1 ABOVE. PROVIDE PIGTAILS FOR CONNECTION TO CYLINDERS (BY OWNER). COORDINATE EXACT INSTALLATION LOCATION OF HEADERS WITH OWNER. MANIFOLD AND HEADERS SHALL BE INSTALLED PER NFPA REQUIREMENTS AND IN COMPLIENCE WITH MANUFACTURE'S RECOMENDATIONS.

3 LOCKABLE VALVE FOR SYSTEM SHUTDOWN ADJACENT TO MANIFOLD ASSEMBLY. VALVE SHALL BE 281600-05 BY OHIO MEDICAL CORPORATION WITH LABEL KIT 281645. MINIMMUM SIZE OF 3/4" FOR OXIGEN AND 1" FOR VACUUM. INSTALL PER MANUFACTURE'S RECOMMENDATIONS TO COMPLY WITH NFPA REQUIREMENTS.

4 PROVIDE GAS SPECIFIC DEMAND CHECK ASSEMBLY CONSISTING OF OHIO MEDICAL CORPORATION MAINLINE PRESSURE SWITCH #281709 AND P500-GAUGE-100 FOR OXIGEN AND P-500-GAUGE-VAC FOR VACUUM UTILIZING PART #281933 AND INSTALLED PER MANUFACTURE'S RECOMMENDED INSTALLATION DIAGRAM. PROVIDE 1/2" OXIGEN SUPPLY PIPE UP WALL TO CEILING FOR DISTRIBUTION PER DRAWING.

5 PRESSURE RELEASE VENT PIPING FOR PRESSURE RELIEF VALVE(S) TO THE OUTSIDE PER MANUFACTURE'S RECOMMENDATIONS. CONTRACTOR SHALL SELECT AN APPROPRIATE DISCHARGE POINT AND SHALL COORDINATE EXACT LOCATION WITH THE LANDLORD. TERMINATE PIPING PER MANUFACTURE'S RECOMMENDATIONS.

6 MEDICAL VACUUM EQUIPMENT TO BE OHIO MEDICAL HEALTHCAIR® SYSTEM MODEL NO 530DB-T2V PACKAGED SYSTEM PART NO 530D-A-T2-V60 - 3 HP ELECTRIC MOTOR DRIVEN PUMPS, A 60 GALLON RECEIVER, AND A U.L. LISTED DUPLEX ELECTRICAL CONTROL SYSTEM MOUNTED IN A NEMA 12 ENCLOSURE. ALL SYSTEM COMPONENTS SHALL BE INSTALLED FOR A COMPLETLY OPERATIONAL MEDICAL VACUUM SYSTEM.

A. FOR MOTOR PROTECTION, THE EQUIPMENT SHOULD NOT BE OPERATED IN AN AMBIENT TEMPERATURE ABOVE 104°F.
B. EQUIPMENT CONFORMS TO THE NATIONAL ELECTRICAL CODE.
C. THE SYSTEM SHALL MEET THE 2012 IFC AND 2012 NFPA 99 REQUIREMENTS.
D. SYSTEM MUST BE CERTIFIED BY AN APPROVED MEDICAL GAS CERTIFICATION COMPANY AFTER INSTALLATION

7 OXIGEN DISTRIBUTION PIPING IN CEILING. SEE PLAN FOR MAIN PIPE SIZES (1/2" MIN) . PIPING SHALL BE INSTALLED PER NFPA AND MANUFACTURE'S REQUIREMENTS AND PER THE MATERIAL SPECIFICATIONS. (SEE SPEC BOOK).

8 VACUUM DISTRIBUTION PIPING IN CEILING. SEE PLAN FOR MAIN PIPE SIZES (3/4" MIN). PIPING SHALL BE INSTALLED PER NFPA AND MANUFACTURE'S REQUIREMENTS. PIPING SHALL BE SIZED PER MANUFACTURE'S RECOMENDATIONS FOR THE VARIOUS LOCATIONS/DEMANDS.

9 OXIGEN AND VACUUM PIPING (SEE PLAN FOR PIPE SIZES) (SEE NOTES #7 & #8) DOWN IN WALL TO ZONE VALVE BOX. SEPARATE LINES FOR EACH VALVE BOX. VALVE BOX SHALL BE OHIO MEDICAL CORPORATION BRAND MODEL #281802-XXX WITH GAUGE PORT. IT SHALL BE CONSTRUCTED OF STEEL AND THE FRAME ALUMINUM, WITH A TINTED, FLEX-GLASS FULL CUT WINDOW. THE VALVE SHALL BE OXIGEN CLEANED, FULL PORT, THREE-PIECE BALL TYPE. COORDINATE MOUNTING HEIGHT WITH OWNER AND LOCAL JURISDICATION REQUIREMENTS AND INSTALL PER MANUFACTURE'S RECOMMENDATIONS. OXIGEN AND VACUUM PIPING (SEE NOTES #7 & #8) UP IN WALL DISTRIBUTION PIPING IN CEILING.

10 - OXIGEN AND VACUUM PIPING (SEE NOTES #7 & #8) DOWN IN WALL TO MEDICAL GAS AND VACUUM OUTLET (VACUUM OUTLET TO INCLUDE SLIDE BRACKET NEXT TO VACUUM OUTLET). MEDICAL GAS OUTLETS SHALL BE OHIO MEDICAL CORPORATION BRAND, DIAMOND QUICK-CONNECT - FOR OXIGEN PART #281010-1-TIS - FOR VACUUM PART NUMBER #281010-5 WITH VK-CSUT-OMAT VACUUM WALL REGULATOR WITH OHMEDA WALL INLET AND NIPPLE CONNECTOR. FOR VACUUM SLIDE PART NUMBER 281680. VERIFY LOCATION OF SLIDE PLATE WITH OWNER PRIOR TO INSTALLATION. OUTLETS SHOULD INCLUDE ONE PIECE, HIGH IMPACT, FLAME-RETARDANT IVORY TRIM PLATE. ALL OUTLETS SHALL BEAR THE UL LABEL AND BE CLEANED FOR OXIGEN SERVICE. OUTLETS SHOULD INCLUDE PRIMARY AND SECONDARY CHECK VALVES. WALL OUTLETS SHALL HAVE GAS SPECIFIC BACK BODY WITH A STEEL MOUNTING PLATE. COORDINATE EXACT MOUNTING HEIGHT/LOCATION WITH OWNER PRIOR TO INSTALLATION.

11 COMBINATION MASTER/AREA ALARM FOR OXIGEN AND VACUUM SYSTEMS. UNIT SHALL BE A OHIO MEDICAL CORPORATION COMBINATION 10 POINT MASTER ALARM/ 6 GAS AREA/10 POINT MASTER ALARM WITH *LONWORKS #281895-101212. ALLOWING IT TO INTERFACE WITH A FUTURE BUILDING AUTOMATION SYSTEM. IT SHALL COMPLY WITH FCC PART 15. IT SHALL HAVE HIGH VISIBILITY LED READOUTS. IT SHALL BE EQUIPPED WITH REMOTE SENSORS (REFER TO NOTE 9 BELOW). COORDINATE EXACT LOCATION OF INSTALLATION WITH CASEWORK AND OWNER PRIOR TO INSTALLATION.

12 REMOTE SENSORS, ONE FOR OXIGEN AND ONE FOR VACUUM, LOCATED ON THE DOWN STREAM (SOURCE) SIDE OF THE DISTRIBUTION PIPING AFTER EACH OF THE ZONE VALVE BOXES. PROVIDE ALL ACCESSORIES REQUIRED FOR A COMPLETE INSTALLATION PER MANUFACTURE'S RECOMMENDATIONS.

13 VACUUM EXHAUST EXHAUST PIPING TO THE OUTSIDE PER MANUFACTURE'S RECOMMENDATIONS. CONTRACTOR SHALL SELECT AN APPROPRIATE DISCHARGE POINT AND SHALL COORDINATE EXACT LOCATION WITH THE LANDLORD. SELECTED LOCATION SHALL BE A MIN OF 10 FEET FROM ANY INTAKE DEVICE OR ANY WINDOWS OR DOORS. TERMINATE PIPING PER MANUFACTURE'S RECOMMENDATIONS

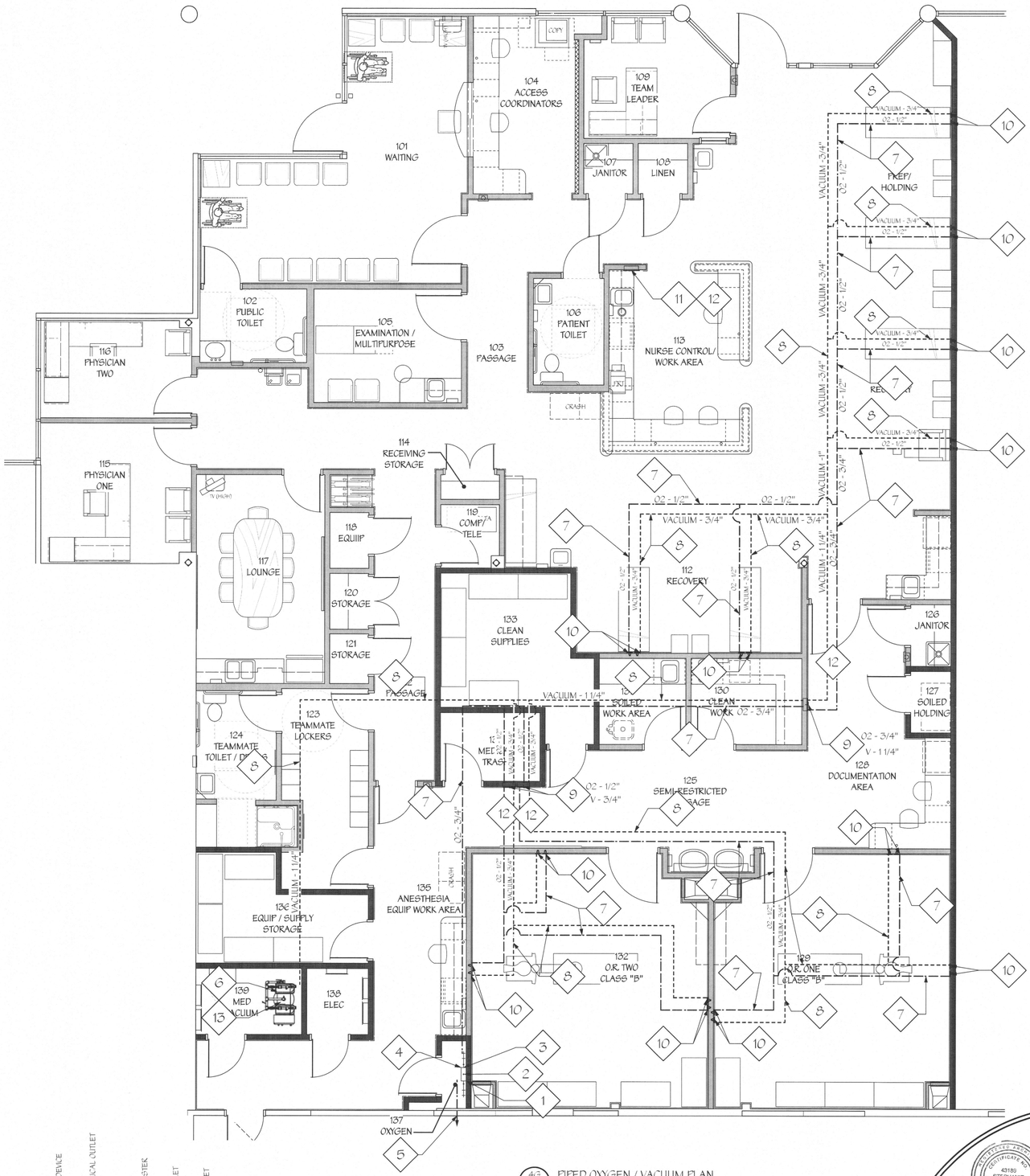

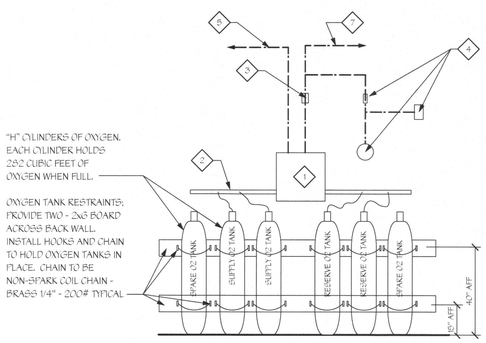

9C / A6 FIPED OXYGEN ENLARGEMENT
NOT TO SCALE

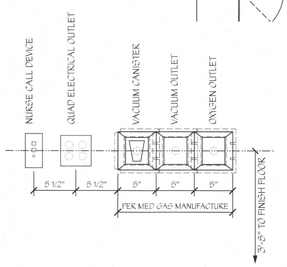

9D / A6 MED GAS OUTLET DETAIL
Scale: 11/2" = 1'-0"

4G / A6 FIPED OXYGEN / VACUUM PLAN
Scale: 1/4" = 1'-0"

NOTE;
LIFELINE HAS A NATIONAL SALES RELATIONSHIP WITH THE FOLLOWING CONTACTS;
CLARK NIERMEYER - OHIO MEDICAL CORPORATION - 800-448-0770

NOTE;
SYSTEM IS DESIGNED TO MEET THE 2012 IFC AND 2012 NFPA 99 AND ALL COMPONENTS AND INSTALLATION METHODS ARE TO BE IN ACCORDANCE WITH THE 2012 IFC AND 2012 NFPA 99.

NOTE;
THE VACUUM SOURCE SHOWN ON THESE PLANS IS FOR SURGICAL MEDICAL VACUUM SOURCES ONLY. THIS IS NOT A WAGD VACUUM SYSTEM.

NOTE; CONTRACTOR AND SUB-CONTRACTORS SHALL VISIT THIS BUILDING AND TENANT AREA AND BE FAMILIAR WITH ALL THE EXISTING CONDITIONS PRIOR TO CONTRACT AWARD

ISSUED FOR ARIZONA STATE ASC PLAN REVIEW

dpce
635 Westport Parkway
Suite 300
Grapevine, Texas 76051
Phone: 817-410-2858
Fax: 817-251-8411
don penn □ consulting engineer

TENANT RENOVATIONS FOR:
LIFELINE
Access Center
325 S. Euclid Ave, Suite 109
Tucson, AZ 85719

Lifeline Vascular Access

InSync
ARCHITECTURAL DESIGNS, INC.
1215 Old Flyesville Road
Office 410-452-8006
Whiteford, MD 21160
Fax 410-452-8046

0" 1" 2" 3"
1/8"=1'-0" 8' 16' 24'
1/4"=1'-0" 4' 8' 12'

MEDICAL GAS PLAN

REVISIONS		
REV#	DATE	DESCRIPTION
#1	6/29/16	PERMIT REVIEW COMMENTS
	1/6/17	ARIZONA STATE ASC PLAN REVIEW

DRAWING NO. A6
SHEET OF
DATE 4/10/13
DRAWN BY BFC
JOB NUMBER 11222
CHECKED BY KDY

A B C D E F G H
1 2 3 4 5 6 7 8 9

NOTICE TO CONTRACTORS

ALL CONTRACTORS PRIOR TO BID SUBMISSION PROCESS SHALL VISIT PROPOSED WORK SITE AND FIELD VERIFY ALL EXISTING CONDITIONS. ANY CONDITIONS THAT DIFFER FROM THAT SHOWN ON THIS PLAN SHALL BE REPORTED TO ARCHITECT/ENGINEER SO THAT NEW AND REVISED BID DRAWINGS OR INFORMATION MAY BE ISSUED. MODIFICATIONS TO SCOPE OF WORK WHICH RESULTS FROM CONTRACTORS NEGLECT TO VISIT THE SITE PRIOR TO SUBMITTING BID, SHALL BE THE CONTRACTORS SOLE RESPONSIBILITY.

MECHANICAL LEGEND

- FLEXIBLE CONNECTION
- TURNING VANES
- SUPPLY DUCT DOWN
- SUPPLY DUCT UP
- RETURN DUCT DOWN
- RETURN DUCT UP
- EXHAUST DUCT DOWN
- EXHAUST DUCT UP
- VOLUME DAMPER
- FIRE DAMPER
- AIRTITE FITTING W/ VOLUME DAMPER
- FLEXIBLE DUCT
- SUPPLY AIR
- RETURN AIR
- EXHAUST AIR
- DIRECTION OF AIR FLOW
- THERMOSTAT
- (1) DRAWING NOTE
- SANITARY PIPE
- VENT PIPE
- COLD WATER PIPE
- HOT WATER PIPE
- HOT WATER RECIRC PIPE
- PIPE DOWN
- PIPE UP
- CLEANOUT
- BALL VALVE
- UNION
- ANGLE STOP VALVE
- EX. EXISTING
- RTU ROOFTOP UNIT
- C.F.M. CUBIC FEET PER MINUTE
- TYP. TYPICAL
- FD FLOOR DRAIN
- FS FLOOR SINK
- F-1 EXHAUST FAN

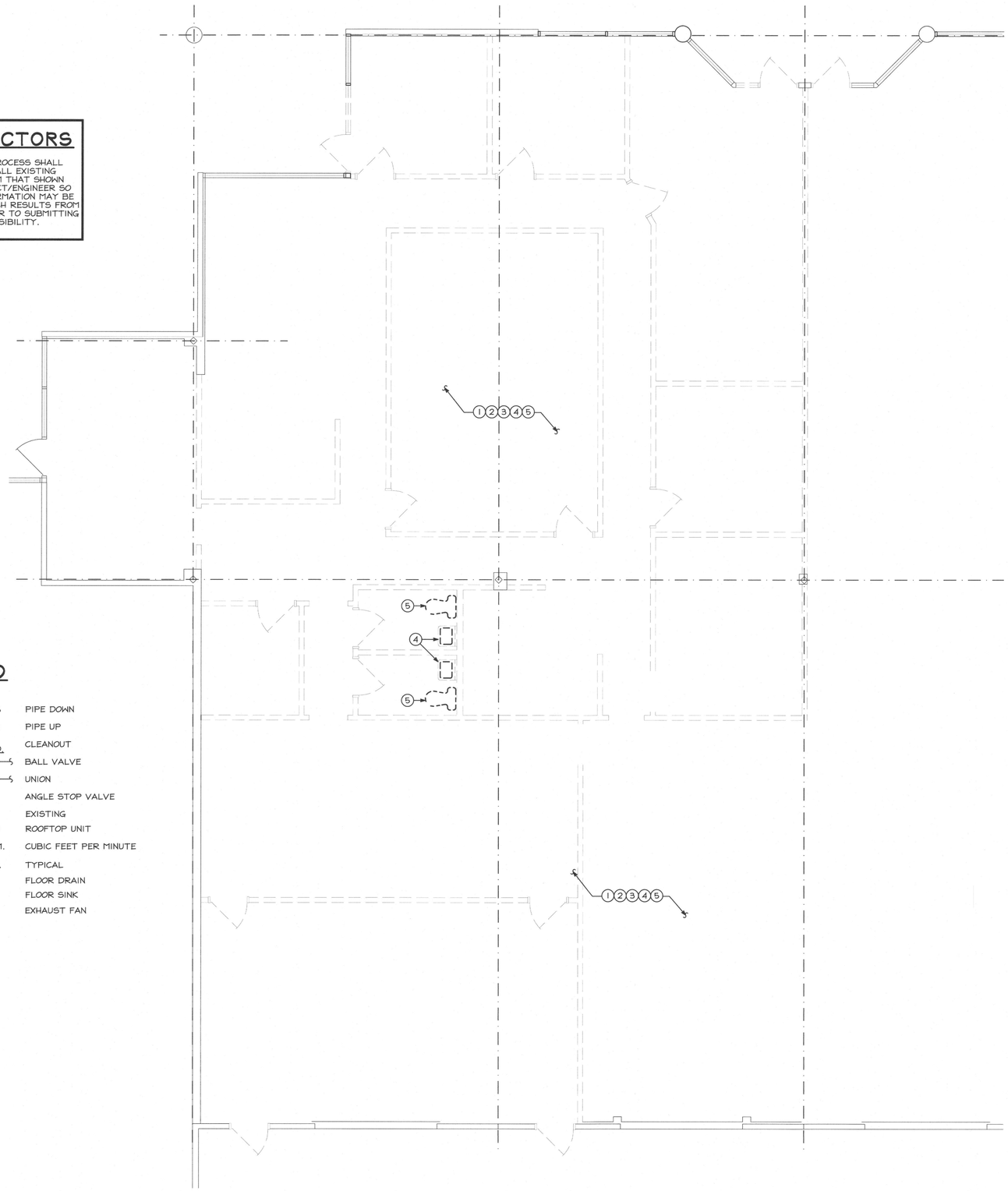

FLOOR PLAN-EXISTING CONDITIONS/ DEMOLITION (HVAC/PIPING)

SCALE: 1/4"=1'-0"

DRAWING NOTES

1. CONTRACTOR TO FIELD VERIFY/LOCATE EXISTING ROOFTOP UNITS THAT SERVE THIS SPACE AND REMOVE IN IT'S ENTIRETY. INCLUDING ROOF CURB AND EXISTING DUCTWORK DOWN THROUGH ROOF. COORDINATE THE ROOF PATCHED WORK WITH THE ORIGINAL/LANDLORD'S ROOFING CONTRACTOR TO BE WEATHERTIGHT.
2. CONTRACTOR TO FIELD VERIFY/LOCATE EXISTING DUCTWORK, AIR DEVICES, CELING FANS, ETC AND REMOVE IN IT'S ENTIRETY THROUGHOUT THE SPACE. ANY DUCTWORK THAT EXTENDS FROM THE ADJACENT TENANT'S HVAC TO BE REMOVE BACK WITHIN TENANT SPACE AND CAPPED.
3. CONTRACTOR TO FIELD VERIFY/LOCATE ALL EXISTING HOT WATER HEATERS THROUGHOUT THE AREA OF DEMOLITION AND REMOVE IN THEIR ENTIRETY, INCLUDING ALL ASSOCIATED HOT WATER PIPES. ALSO REMOVE ALL EXISTING COLD WATER PIPES IN OUR AREA OF WORK BACK TO WHERE IT ENTERS OUR SPACE AND CAP.
4. CONTRACTOR TO FIELD VERIFY/LOCATE EXISTING PLUMBING FIXTURE AND REMOVE, INCLUDING ALL EXISTING DOMESTIC HOT THROUGHOUT THE SPACE AND COLD WATER PIPES TO INCOMING MAIN AND CAP FOR FUTURE REUSE. TENANT SPACE AND CAP. REMOVE EXISTING SANITARY VENT PIPE UP TO JUST BELOW THE ROOF LINE OF EXISTING SANITARY VENT THROUGH ROOF AND CAP. ALSO REMOVE EXISTING SANITARY PIPE DOWN JUST BELOW SLAB AND CAP.
5. CONTRACTOR TO FIELD VERIFY/LOCATE EXISTING PLUMBING FIXTURE AND REMOVE, INCLUDING ALL EXISTING DOMESTIC COLD WATER PIPE ASSOCIATED WITH THE EXISTING PLUMBING FIXTURE BACK TO INCOMING COLD WATER PIPE THAT SERVES THE SPACE AND CAP FOR REUSE. REMOVE EXISTING SANITARY VENT PIPE UP TO JUST BELOW THE ROOF LINE OF EXISTING SANITARY VENT THROUGH ROOF AND CAP. ALSO REMOVE EXISTING SANITARY PIPE DOWN JUST BELOW SLAB AND CAP.

GENERAL NOTES (HVAC/PIPING)

1) ALL ITEMS INDICATED BOLD SHALL BE CONSIDERED NEW UNLESS OTHERWISE NOTED.
2) ALL DUCTWORK SHALL BE FABRICATED AND INSTALLED IN ACCORDANCE WITH SMACNA STANDARDS.
3) ALL WORK SHALL BE DONE IN STRICT ACCORDANCE WITH ALL APPLICABLE MUNICIPAL, STATE, AND CITY/COUNTY CODES.
4) COORDINATE ALL THERMOSTAT LOCATIONS WITH FINAL PARTITION/FURNITURE LATOUT.
5) PROVIDE ACCESS PANELS EQUAL TO ARCHITECTURAL ACCESS DOORS, MODEL AHD BY METROPOLITAN DOOR INDUSTRIES WITH CYLINDER LOCK AND KEY. THESE PANELS SHALL BE PROVIDED ANYWHERE THERE ARE VOLUME DAMPERS, CONTROLS, ACTUATORS, ETC. THAT HAVE TO BE LOCATED ABOVE DRYWALL CEILINGS AND SHALL BE LOCATED AND SIZED TO ALLOW ACCESS TO THESE ITEMS ABOVE THE DRYWALL CEILINGS. COORDINATE THESE LOCATIONS WITH INSTALLATION OF THE GYP BOARD CEILING. ANY ACCESS PANELS INSTALLED IN THE PROCEDURE ROOM MUST BE GASKETED TYPE ONLY AND MUST MEET THE MONOLITHIC REQUIREMENTS OF THE CEILING. PRIOR TO PURCHASE/INSTALL COORDINATE WITH THE CONSTRUCTION MANAGER.
6) EXISTING SANITARY PIPING SHOWN IS ASSUMED/APPROXIMATE LOCATION. EXISTING SANITARY PIPING MUST BE ACTUALLY FIELD DETERMINED FOR EXACT LOCATION, INVERT/FALL AND FLOW DIRECTION PRIOR TO INSTALLATION.
7) PLUMBING ROUGH-IN CONNECTIONS ARE APPROXIMATE LOCATIONS. ALL ROUGH-IN CONNECTIONS TO BE COORDINATED IN THE FIELD BY THE PLUMBING CONTRACTOR.
8) PROVIDE TRIM PANELS FOR SUPPLY DIFFUSER MOUNTED IN DRYWALL CEILING.
9) THE BALANCING OF AIRFLOWS IS TO BE PERFORMED BY A AABC CERTIFIED BALANCING CONTRACTOR ONLY. FINAL AIRFLOW BALANCING REPORT WILL BE MADE AVAIBLE PRIOR TO THE FINAL INSPECTION.
10) ALL DOMESTIC WATER PIPING TO BE INSTALLED ON THE WARM SIDE OF THE BUILDING INSULATION.
11) BEFORE ANY ROOF WORK IS PERFORMED THE MECHANICAL CONTRACTOR IS TO CONTRACT THE ORIGINAL ROOFING CONTRACTOR TO VERIFY THAT ANY WORK PERFORMED WILL NOT VOID ANT WARRANTIES. ALL ROOF PENETRATION AND/OR REPAIR WORK ON THE ROOF IS TO BE COORDINATED WITH THE LANDLORD'S ROOFING CONTRACTOR SO WORK MAY BE PERFORMED.
12) PRIOR TO THE INSTALLATION OF THE ROOFTOP UNITS ON THE ROOF A STRUCTURAL ENGINEER WILL NEED TO SIGN OFF ON THE NEW HVAC EQUIPMENT BEING MOUNTED ON THE EXISTING ROOF.
13) ALL COLOR SELECTIONS FOR PLUMBING FIXTURES TO BE MADE BY THE ARCHITECT.
14) FIRE STOPPING MATERIAL(NON-COMBUSTIBLE) FOR WALLS, FLOORS AND CEILINGS SHALL BE PROVIDED BY THE CONTRACTOR AS REQUIRED TO MAINTAIN ANY FIRE SEPERATION. THE CONTRACTOR SHALL BE RESPONSIBLE FOR SCHEDULING AND COORDINATION OF ALL FIRE STOPPING WORK, RESULTING FROM INSTALLATION OF NEW PIPING, DUCTWORK, ETC. THE CONTRACTOR IS RESPONSIBLE FOR FILLING ALL VOIDS IN WALLS, CEILINGS AND FLOORS TO WITHIN 1/2" OF EACH PENETRATION WITH MATERIAL TO MATCH THE ADJACENT SURFACES AND/OR CONSTRUCTION, UNLESS TIGHTER CLEARANCES ARE REQUIRED BY CODE. THE CONTRACTOR SHALL CORRECT ANY DEFICIENCIES PRIOR TO INITIATION OF FIRE STOPPING.
15) PRIOR TO ANY PIPING AND/OR DUCTWORK BEING INSTALLED MECHANICAL/PLUMBING CONTRACTOR IS TO COORDINATE ALL WORK WITH THE ELECTRICAL CONTRACTOR TO AVOID ANY NEC VIOLATIONS. ALSO COORDINATE INSTALL WITH EACH OTHER TOO.
16) PROVIDE/INSTALL A CLEAR VENTED LOCKABLE COVER FOR ALL THERMOSTATS LOCATED THROUGHOUT THE SPACE.
17) DRAWINGS SHALL BE CONSIDERED SCHEMATIC IN NATURE AND SHALL REPRESENT A COMPLETED PROJECT. ACTUAL INSTALLATION AND METHODS OF ACHIEVING A SATISFACTORY AND INTENDED INSTALLATION ARE THE RESPONSIBILITY OF THE CONTRACTOR. LOCATIONS OF EQUIPMENT ARE INTENDED TO SHOW A GENERAL ARRANGEMENT AND INTENDED FUNCTION. COORDINATE WITH ALL CONTRACT DOCUMENTS, OWNER-PROVIDED EQUIPMENT (IF ANY), EQUIPMENT DRAWINGS, ARCHITECTURAL, STRUCTURAL, AND ELECTRICAL CONTRACT DOCUMENTS. COORDINATE WITH OTHER TRADES. AS DRAWINGS ARE SCHEMATIC IN NATURE, DO NOT SCALE DRAWINGS. MINOR MODIFICATIONS OF WORK TO COMPLY SHALL BE PROVIDED.
18) ALLOWANCES ARE TO BE INCLUDED FOR UNFORSEEN CONDITIONS THAT MAY EFFECT THE CONTRACTOR'S SCOPE OF WORK. MINOR DEVIATIONS REQUIRED FOR ACCOMPLISHING THE INTENT OF THIS DESIGN ARE TO BE INCLUDED IN THAT ALLOWANCE.
19) ALL EXHAUST FAN OUTLETS INCLUDING THE SANITARY VENTS THROUGH THE ROOF MUST BE LOCATED A MINIMUM OF 15'-0" FROM ANY FRESH AIR INTAKES.
20) MECHANICAL CONTRACTOR MUST COORDINATE AND INSTALL THE NEW EXHAUST FANS AND OUTDOOR UNITS WITH NEW CURBS AS REQUIRED. ALL PROVISIONS MUST BE MADE TO MAINTAIN A WEATHER TIGHT ROOF. COORDINATE ALL WORK ON THE ROOF WITH THE ORIGINAL/LANDLORD'S ROOFING CONTRACTOR FOR WORK TO BE DONE.
21) CONTRACTOR TO PROVIDE/INSTALL BATT INSULATION UP INSIDE ALL NEW ROOF CURBS TO BE INSTALL TO BE NEATLY AND EVENLY INSTALLED MADE WEATHER TIGHT.
22) PRIOR TO THE INSTALL OF THE SUPPLY AND RETURN AIR DUCTWORK THROUGH THE ROOF THE CONTRACTOR MUST FIELD DETERMINE THE DUCT SIZES GIVEN WILL FIT THROUGH THE EXISTING STRUCTURE, INCLUDING WITH DUCT INSULATION.

ISSUED FOR ARIZONA STATE ASC PLAN REVIEW

dpce
don penn ■ consulting engineer
688 Westport Parkway
Suite 300
Grapevine, Texas 76051
Phone: 817-410-2888
Fax: 817-251-9411

Expires 3/31/18

TENANT RENOVATIONS FOR:
LIFELINE
Access Center
325 S. Euclid Ave. Suite 109
Tucson, AZ 85719

Lifeline Vascular Access

InSync
ARCHITECTURAL DESIGNS, INC.
1213 Old Pylesville Road Whiteford, MD 21160
Office 410-452-8006 Fax 410-452-8046

0" 1" 2" 3"
1/8"=1'-0" 8' 16' 24'
1/4"=1'-0" 4' 8' 12'

FLOOR PLAN-DEMOLITION (HVAC/PIPING)

REVISIONS		
REV#	DATE	DESCRIPTION
#1	6/29/16	Permit Review Comments
	1/6/17	Arizona State ASC Plan Review

DRAWING NO. M1
SHEET OF
DATE 4/13/16 DRAWN BY DLJ
JOB NUMBER 11222 CHECKED BY DLJ

A B C D E F G H
1 2 3 4 5 6 7 8 9

DRAWING NOTES

1. OUTLINE OF NEW ROOFTOP UNIT MOUNTED ON ROOF ON NEW ROOF CURB. REFER TO SHEET M8 FOR SIZE AND CAPACITY (TYPICAL).
2. OUTLINE OF HORIZONTAL SUPPLY AND RETURN AIR DUCTWORK FROM ROOFTOP UNIT MOUNTED ON ROOF (TYPICAL).
3. EXTEND 16"x14" SUPPLY AND 18"x16" RETURN AIR DUCTWORK DOWN THROUGH ROOF IN WEATHERTIGHT ROOF FLASHING (TYPICAL).
4. EXTEND 16"x14" SUPPLY AND 16"x16" RETURN AIR DUCTWORK DOWN THROUGH ROOF WEATHERTIGHT ROOF FLASHING.
5. EXTEND 16"x14" SUPPLY AIR DUCTWORK DONE THROUGH ROOF AND TRANSITION TO A 24"x14" WITHIN CEILING AREA. EXTEND 18"x16" RETURN AIR DUCTWORK DOWN THROUGH ROOF. TRANSITION TO AN 18"x14" WITHIN CEILING AREA. ROUTE BOTH DUCT DOWN THROUGH ROOF IN WEATHERTIGHT ROOF FLASHING.
6. HORIZONTAL SUPPLY AND RETURN AIR DUCTWORK TO NEW ROOFTOP UNIT ON ROOF. TRANSITION DUCTWORK AS REQUIRED TO NEW ROOFTOP UNIT'S CONNECTION. PROVIDE FLEXIBLE CONNECTION IN DUCTWORK AT NEW UNIT CONNECTIONS.
7. DUCT MOUNTED SMOKE DETECTOR. SMOKE DETECTOR SHOWN FOR INFORMATION ONLY: COORDINATE LOCATION OR SPECIAL REQUIREMENTS WITH FIRE ALARM VENDOR AND ELECTRICAL CONTRACTOR. MECHANICAL CONTRACTOR PROVIDE A 12"x12" ACCESS DOOR IN DUCTWORK FOR INSPECTIONS. COORDINATE WITH ELECTRICAL CONTRACTOR. REFER TO SHEET M8 FOR SEQUENCE OF OPERATION.
8. DUCT MOUNTED ELECTRIC HEATER SUPPORTED ABOVE CEILING. REFER TO SHEET M8 FOR SIZE AND CAPACITY.
9. SUPPLY AIR DUCTWORK SUSPENDED FROM STRUCTURE ABOVE CEILING (TYPICAL).
10. RETURN AIR DUCTWORK SUSPENDED FROM STRUCTURE ABOVE CEILING (TYPICAL).
11. 24"x24" LOUVERED FACE SUPPLY AIR DEVICE MOUNTED WITHIN ACOUSTICAL CEILING TILE WITH NECK SIZE AND AIR VOLUME INDICATED (TYPICAL).
12. 24"x24" RETURN AIR GRILLE MOUNTED WITHIN ACOUSTICAL CEILING TILE WITH NECK SIZE AND AIR VOLUME INDICATED (TYPICAL).
13. 12"x12" LOUVERED FACE SUPPLY AIR DEVICE WITHIN 24"x24" PANEL MOUNTED WITHIN ACOUSTICAL CEILING TILE WITH NECK SIZE AND AIR VOLUME INDICATED (TYPICAL).
14. 12"x12" LOUVERED FACE SUPPLY AIR DEVICE MOUNTED IN DRYWALL CEILING WITH NECK SIZE AND AIR VOLUME INDICATED.
15. 12"x12" RETURN AIR GRILLE MOUNTED WITHIN 24"x24" PANEL MOUNTED WITHIN ACOUSTICAL CEILING TILE WITH NECK SIZE AND AIR VOLUME INDICATED.
16. 12"x12" RETURN AIR GRILLE MOUNTED IN DRYWALL CEILING WITH NECK SIZE AND AIR VOLUME INDICATED.
17. 24"x24" RETURN AIR GRILLE MOUNTED WITHIN ACOUSTICAL CEILING TILE WITH AIR TRANSFER ASSEMBLY WITH FIRE DAMPER. REFER TO SHEET M7 FOR MORE INFORMATION.
18. 24"x48" SUPPLY AIR LAMINAR FLOW DIFFUSER MOUNTED WITHIN DRYWALL CEILING WITH NECK SIZE (10"ϕ) AND AIR VOLUME INDICATED (TYPICAL).
19. STAINLESS STEEL RETURN AIR GRILLE MOUNTED ±6" ABOVE FINISHED FLOOR IN WALL WITH NECK SIZE AND AIR VOLUME INDICATED.
20. NEW THERMOSTAT TO BE MOUNTED ±48" ABOVE FINISHED FLOOR ON WALL TO CONTROL NEW ROOFTOP UNIT. PROVIDE A CLEAR VENTED LOCKABLE COVER FOR THERMOSTAT.
21. NEW THERMOSTAT TO BE MOUNTED ±48" ABOVE FINISHED FLOOR ON WALL TO CONTROL NEW ROOFTOP UNIT. PROVIDE/INSTALL A REMOTE AIR SENSOR FOR THE THERMOSTAT IN THE RETURN AIR GRILLE AS INDICATED. PROVIDE A CLEAR VENTED LOCKABLE COVER FOR THERMOSTAT.
22. NEW TEMPERATURE SENSOR TO BE MOUNTED ±48" ABOVE FINISHED FLOOR MOUNTED ON WALL TO BE INTERLOCK DAISY CHAINED TO THE CONTROL MODULE.
23. NEW CONTROL MODULE TO BE MOUNTED ±48" ABOVE FINISHED FLOOR ON TO SERVE THE ROOFTOP UNIT.
24. HEATING ONLY THERMOSTAT TO BE MOUNTED ±47" ABOVE FINISHED FLOOR ON WALL TO CONTROL DUCT MOUNTED ELECTRIC HEATER. PROVIDE A CLEAR VENTED LOCKABLE COVER FOR THERMOSTAT.
25. AIR-TITE FITTING WITH DAMPER AND ADHESIVE GASKET (TYPICAL).
26. INSULATED/PLENUM RATED FLEXIBLE DUCTWORK (TYPICAL).
27. VOLUME DAMPER (TYPICAL).
28. FILTER PULL ACCESS AREA ABOVE THE CEILING FOR FACTORY SUPPLIED FILTER. CLEARLY/ NEATLY IDENTIFY ON THE CEILING GRID WITH ¼" HIGH LETTERS JUST BELOW FILTER.
29. INSTALL A FIRE DAMPER IN DUCTWORK ABOVE THE CEILING. REFER TO SHEET M7 FOR DETIAL "HORIZONTAL DUCT FIRE DAMPER DETAIL" FOR MORE INFORMATION. CLEARLY/ NEATLY IDENTIFY ON THE CEILING GRID WITH 1/4" HIGH LETTERS JUST BELOW FIRE DAMPER.
30. 24"x24"x11½" HEPA FILTER IN A 24"x24" FILTER PULL RACK ABOVE THE CEILING. PROVIDE HIGH CAPACITY FILTER AS MANUFACTURED BY CAMFIL AIR FILTER, FILTRA 2000, (FA 1560-01-01). FILTER SHALL HAVE NO MORE THEN 1.0" PRESSURE DROP. ALSO INCLUDED A MERV 8 CAMFIL 30/30 24"x24"x2" PREFILTER. CLEARLY/NEATLY IDENTIFY ON THE FILTER BOX AND ON THE CEILING GRID WITH 1/4" HIGH LETTERS HEPA FILTER. FILTER RACK WILL HOUSE THE HEPA AND PRE FILTERS AS MAUNFACTURED BY CAMFIL, MAGNAPACK 70713202 M/P 4-12 PF 1 x 1. LASTLY PROVIDE/INSTALL PER MANUFACTURER'S RECOMMENDATIONS A DWYER 0-2" GAGE WITH A605 KIT.
31. DIGITAL TEMPERATURE/HUMIDITY SENSOR TO BE MOUNTED ON THE WALL ±48" ABOVE FINISHED FLOOR. INTERLOCK WITH THE AAON'S VCMX CONTROLLER LOCATED IN THE ROOFTOP UNIT. HUMIDITY SENSOR TO SERVE AAON'S DEHUMIDIFICATION SYSTEM AND THE TEMPERATURE SENSOR FOR HEATING/COOLING TEMPERATURE CONTROL. HUMIDITY AND TEMPERATURE READINGS FROM THE PROCEDURE ROOM WILL BE SENT TO AAON'S VCMX CONTROLLER AT THE ROOFTOP UNIT TO BE PROCESSED. THE DIGITAL TEMPERATURE/ HUMIDITY SENSOR WILL HAVE A DIGITAL TEMPERATURE READOUT WITH THE CAPABILITIES TO ALLOW A MANUAL 2 DEGREE AIR TEMPERATURE ADJUSTMENT CHANGE WITHIN THE PROCEDURE ROOM.
32. THE AAON SYSTEM MANAGER DIGITAL DISPLAY/CONTROLLER TO BE MOUNTED ±48" ABOVE FINISHED FLOOR ON WALL TO CONTROL ROOFTOP UNIT (AAON) UNIT. THE SYSTEM MANAGER WILL TAKE HUMIDITY AND TEMPERATURE READINGS FROM THE VCMX CONTROLLER AS SENSED IN THE PROCEDURE ROOMS. ALL TEMPERATURE AND HUMIDITY SETPOINTS WILL BE SET FROM THE SYSTEM MANAGER.
33. HUMIDISTAT THERMOSTAT TO BE MOUNTED ±48" ABOVE FINISHED FLOOR TO CONTROL HUMIDIFIER. PROVIDE A CLEAR VENTED LOCKABLE COVER FOR HUMIDISTAT. CLEARLY/ NEATLY IDENTIFY ABOVE THE HUMIDISTAT WITH 1/4" HIGH LETTERS "HUMIDISTAT TO BE FULLY OPERATIONABLE DURING THE WINTER/NON OPERATIONABLE DURING THE SUMMER".
34. WALL MOUNTED HUMIDIFIER. MOUNT AS HIGH AS POSSIBLE ON WALL JUST BELOW THE CEILING. REFER TO SHEET M8 FOR SIZE AND CAPACITY AND DETAIL ON THIS SHEET FOR MORE INFORMATION (TYPICAL).
35. SUPPORT 1½" COPPER STEAM/CONDENSATE RETURN LINE ABOVE CEILING.
36. DUCT MOUNTED STEAM DISTRIBUTOR. REFER TO DETAIL ON SHEET M8 FOR MORE INFORMATION.
37. TRANSITION ROUND RIGID DUCTWORK TO A 14"x12" DUCT MOUNTED MOUNTED IN WALL ABOVE CEILING TO ACCOMPANY FIRE DAMPER AS INDICATED. CLEARLY/NEATLY IDENTIFY ON THE CEILING GRID WITH 1/4" HIGH LETTERS JUST BELOW FIRE DAMPER.
38. ELECTRONIC BOX SUSPENDED FROM STRUCTURE ABOVE. REFER TO SHEET M8 FOR SIZE AND CAPACITY.
39. NEW THERMOSTAT TO BE MOUNTED ±48" ABOVE FINISHED FLOOR ON WALL TO CONTROL NEW ELECTRONIC BOX. PROVIDE A CLEAR VENTED LOCKABLE COVER FOR THERMOSTAT.
40. PROVIDE BRICK VENT VENTILATION LOUVER AS MANUFACTURER BY COOK, MODEL BVI (16½"x 4¾") IN EXTERIOR WALL WITH FULL SIZE PLENUM EXTENSION THROUGH THE WALL WITH OPEN DUCT AND 1/2"x1/2" WIRE MESH SCREEN OVER OPENING. MOUNT ONE LOW AT 6" ABOVE FINISHED FLOOR AND ONE HIGH 6" FROM THE CEILING.
41. PRIOR TO INSTALL BE CERTAIN UNIT HAS SUPPORT OF A MINIMUM OF (3) I-JOISTS FOR NEW ROOFTOP UNIT. REFER TO STRUCTURAL FOR EXACT DIRECTIONS.
42. WALL MOUNTED DUCTLESS SPLIT SYSTEM MOUNTED ON WALL ±7'-0" ABOVE FINISHED FLOOR. REFER TO SHEET M8 FOR SIZE AND CAPACITY.
43. OUTLINE OF AIR COOLED CONDENSING UNIT SECURED ON THY CURBS ON ROOF. REFER TO SHEET M8 FOR SIZE AND CAPACITY. CONTRACTOR TO FIELD VERIFY AND EXTEND THE REFRIGERANT PIPING ABOVE THE CEILING AND OVER TO AIR HANDLING AND MAKE PROPER CONNECTION TO THE INDOOR UNIT. SIZE/TRAP AND INSTALL REFRIGERANT PIPING PER THE MANUFACTURER'S RECOMMENDATIONS.
44. NEW THERMOSTAT TO BE MOUNTED ±48" ABOVE FINISHED FLOOR ON WALL TO CONTROL NEW AIR HANDLING UNIT.

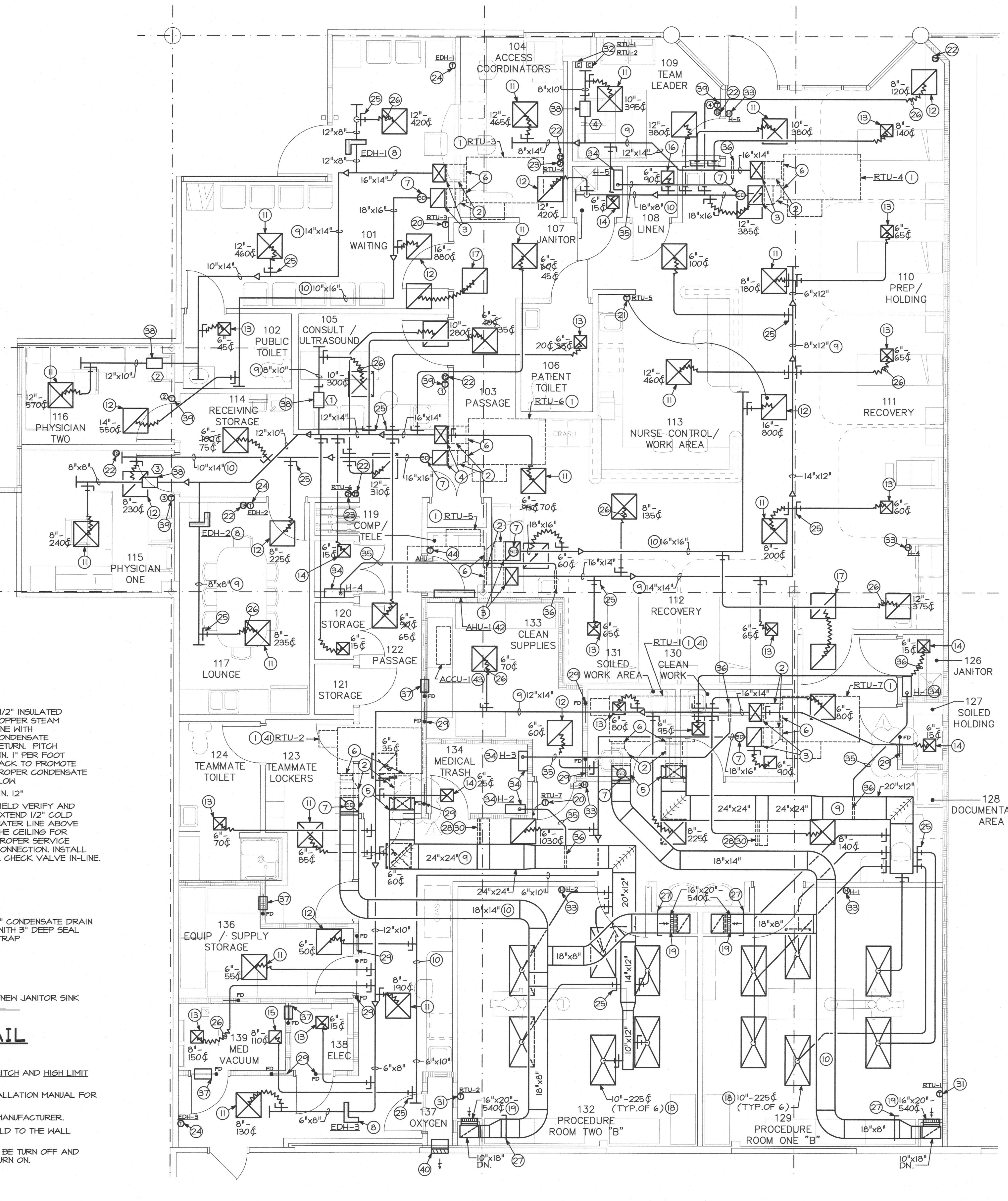

FLOOR PLAN-EXISTING CONDITIONS/ NEW WORK (HVAC)

SCALE: 1/4"=1'-0"

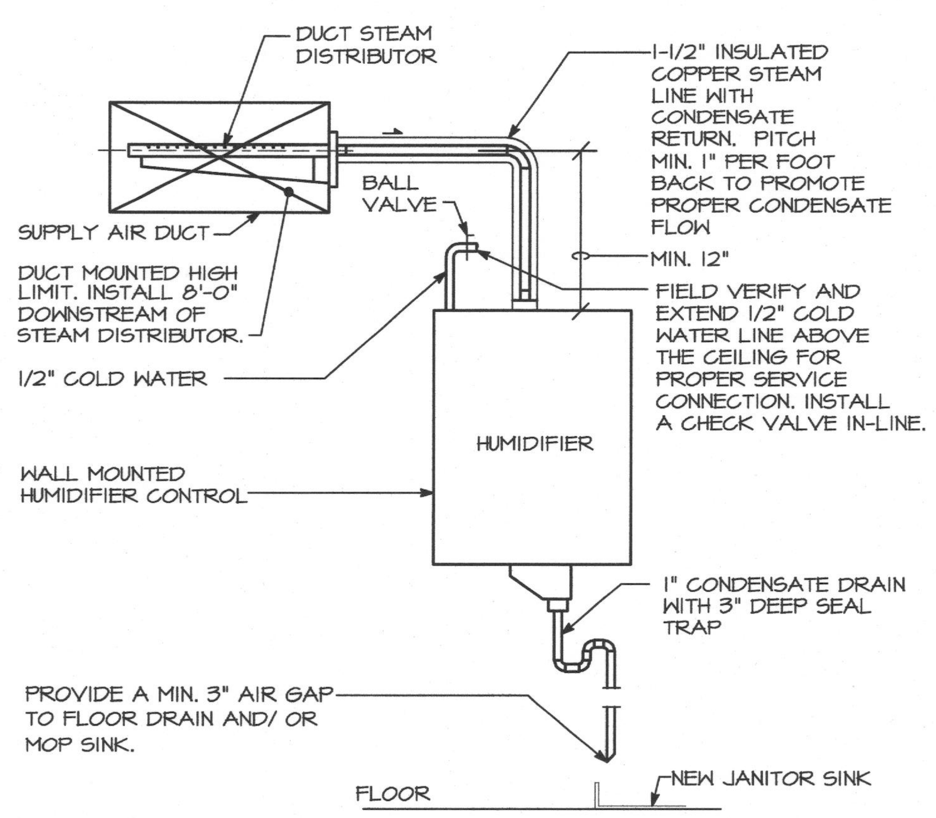

HUMIDIFIER DETAIL

NO SCALE

NOTES:

1. HUMIDIFIER TO BE PROVIDED WITH AN AIR PROVING SWITCH AND HIGH LIMIT HUMIDISTAT SENSOR.
2. CONTRACTOR TO REFER TO THE MANUFACTUER'S INSTALLATION MANUAL FOR PROPER CONDENSATE RETURN.
3. HUMIDISTAT TO BE PROVIDED WITH HUMIDIFIER FROM MANUFACTURER.
4. MAXIMUM DISTANCE FROM THE DUCT MOUNTED MANIFOLD TO THE WALL MOUNTED HUMIDIFIER IS 20'-0".

**5. FROM APRIL THROUGH OCTOBER THE HUMIDIFIER IS TO BE TURN OFF AND FROM OCTOBER TO APRIL THE HUIMIDIFIER IS TO BE TURN ON.

ISSUED FOR ARIZONA STATE ASC PLAN REVIEW

Registered Professional Engineer (Mechanical) CERTIFICATE NO. 31086 D.J. PENN ARIZONA U.S.A. Date Signed 1/19/17 Expires 3/31/18

dpce don penn ▪ consulting engineer
635 Westport Parkway Suite 300 Grapevine, Texas 76051 Phone: 817-410-2858 Fax: 817-251-8411

TENANT RENOVATIONS FOR: LIFELINE Access Center
325 S. Euclid Ave, Suite 109 Tucson, AZ 85719

Lifeline Vascular Access

InSync ARCHITECTURAL DESIGNS, INC.
1213 Old Pylesville Road Whiteford, MD 21160
Office 410-452-8006 Fax 410-452-8046

0" 1" 2" 3"
1/8"=1'-0" 8' 16' 24'
1/4"=1'-0" 4' 8' 12'

FLOOR PLAN-NEW WORK (HVAC)

REVISIONS

REV#	DATE	DESCRIPTION
#1	6/29/16	Permit Review Comments
	1/6/17	Arizona State ASC Plan Review

DRAWING NO. M2
SHEET OF
DATE 4/13/16 DRAWN BY DLI
JOB NUMBER 11222 CHECKED BY DLI

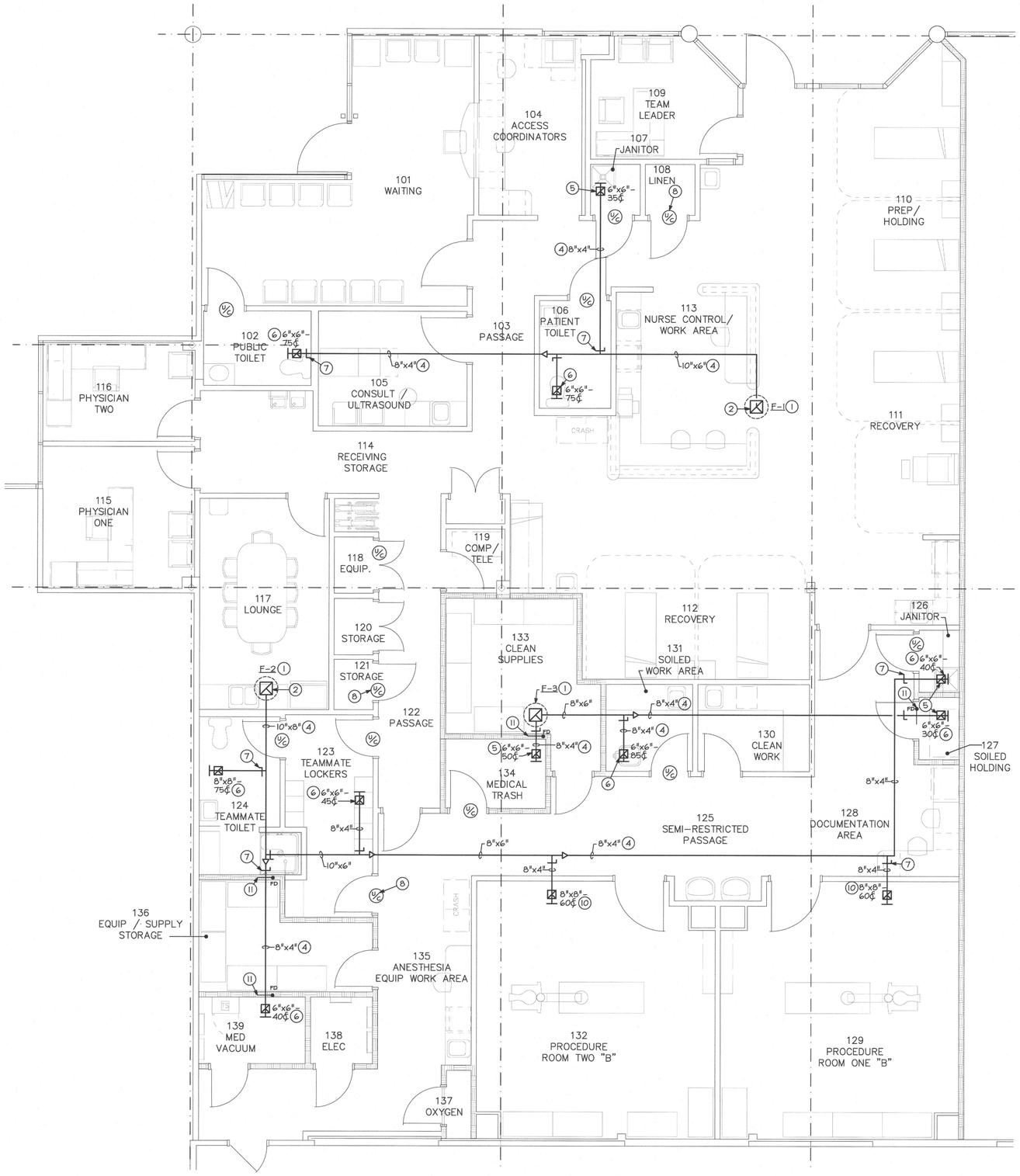

FLOOR PLAN-EXISTING CONDITIONS/ NEW WORK (EXHAUST)

SCALE: 1/4"=1'-0"

DRAWING NOTES

1. OUTLINE OF EXHAUST FAN MOUNTED ON ROOF. REFER TO SHEET M8 FOR SIZE AND CAPACITY. PRIOR TO INSTALLING THE ROOF MOUNTED EXHAUST FAN THE MECHANICAL CONTRACTOR MUST COORDINATE THE EXACT MOUNTING LOCATION WITH THE BUILDING OWNER AND MAINTAIN A DISTANCE FROM ANY FRESH AIR INTAKE ON THE ROOF.
2. EXTEND A 14"x14" EXHAUST AIR DUCTWORK PLENUM BOX DOWN ±36" BELOW ROOF LINE AND UP THROUGH EXISTING ROOF TO ROOF MOUNTED EXHAUST FAN. TRANSITION DUCTWORK AS REQUIRED TO UNIT'S CONNECTION. PROVIDE FLEXIBLE CONNECTION AT DUCTWORK CONNECTION TO UNIT.
3. SPARE.
4. EXHAUST AIR DUCTWORK SUPPORTED ABOVE THE CEILING/TIGHT TO STRUCTURE (TYPICAL).
5. EXHAUST AIR GRILLE MOUNTED IN DRYWALL CEILING WITH NECK SIZE AND AIR VOLUME INDICATED (TYPICAL).
6. EXHAUST AIR GRILLE MOUNTED WITHIN ACOUSTICAL CEILING TILE WITH NECK SIZE AND AIR VOLUME INDICATED (TYPICAL).
7. VOLUME DAMPER (TYPICAL).
8. 1" DOOR UNDERCUT BY OTHERS (TYPICAL).
9. SPARE.
10. STAINLESS STEEL EXHAUST AIR GRILLE MOUNTED IN DRYWALL CEILING WITH NECK SIZE AND AIR VOLUME INDICATED.
11. INSTALL A FIRE DAMPER IN DUCTWORK ABOVE THE CEILING. REFER TO SHEET M7 FOR DETIAL "HORIZONTAL DUCT FIRE DAMPER DETAIL" FOR MORE INFORMATION. CLEARLY/ NEATLY IDENTIFY ON THE CEILING GRID WITH 1/4" HIGH LETTERS JUST BELOW FIRE DAMPER.

ISSUED FOR ARIZONA STATE ASC PLAN REVIEW

Registered Professional Engineer (Mechanical) CERTIFICATE NO. 34025 DJ PENN 11/9/17 Date Signed ARIZONA U.S.A.

Expires 3/31/18

dpce
don penn = consulting engineer
635 Westport Parkway
Suite 300
Grapevine, Texas 76051
Phone: 817-410-2858
Fax: 817-251-8411

TENANT RENOVATIONS FOR:
LIFELINE
Access Center
325 S. Euclid Ave, Suite 109
Tucson, AZ 85719

Lifeline Vascular Access

InSync
ARCHITECTURAL DESIGNS, INC.
1213 Old Pylesville Road Whiteford, MD 21160
Office 410-452-8006 Fax 410-452-8046

1/8"=1'-0" 8' 16' 24'
1/4"=1'-0" 4' 8' 12'

FLOOR PLAN-NEW WORK (EXHAUST)

REVISIONS

REV#	DATE	DESCRIPTION
#1	6/29/16	Permit Review Comments
	1/6/17	Arizona State ASC Plan Review

DRAWING NO. M3
SHEET OF
DATE 4/13/16
DRAWN BY DLI
JOB NUMBER 11222
CHECKED BY DLI

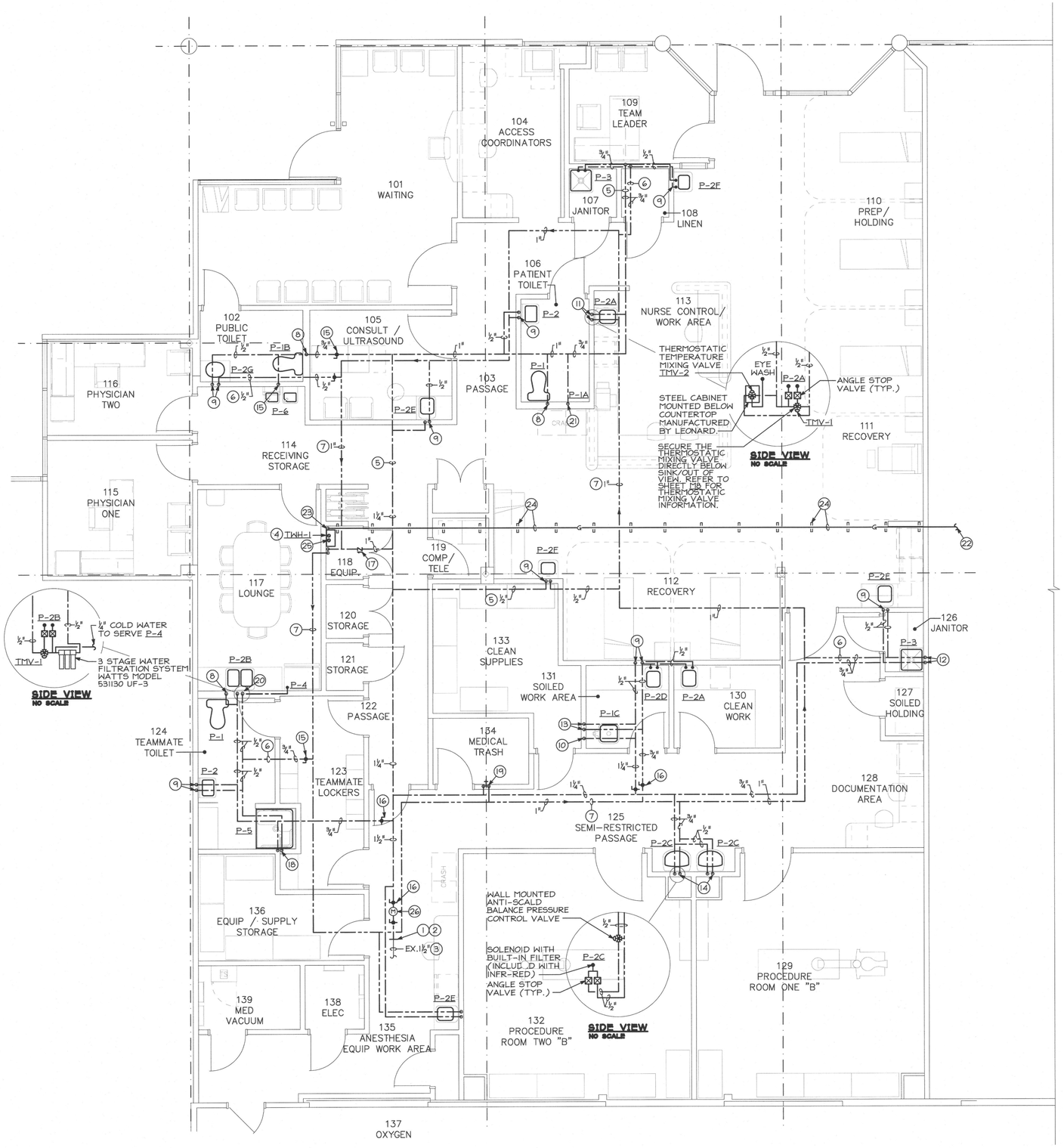

FLOOR PLAN-EXISTING CONDITIONS/ NEW WORK (PIPING)

SCALE: 1/4"=1'-0"

DRAWING NOTES

1. CONTRACTOR TO FIELD VERIFY/LOCATE THE EXISTING 1½" COLD WATER LINE THAT SERVE OUR SPACE AND MAKE PROPER COLD WATER PIPE CONNECTION WHERE INDICATED ABOVE CEILING.
2. EXTEND NEW 1½" DOMESTIC COLD WATER LINE ABOVE CEILING AND MAKE PROPER CONNECTION TO EXISTING COLD WATER LINE.
3. EXISTING COLD WATER PIPE SUPPORTED FROM STRUCTURE ABOVE TO REMAIN
4. GAS FIRED TANKLESS WATER HEATER MOUNTED ON WALL. REFER TO DETAIL ON SHEET M6 FOR PIPING AND MOUNTING DETAIL. ALSO REFER TO SHEET M8 FOR SIZE AND CAPACITY.
5. DOMESTIC COLD WATER PIPING SUPPORTED ABOVE CEILING (TYPICAL).
6. DOMESTIC HOT WATER PIPING SUPPORTED ABOVE CEILING (TYPICAL).
7. DOMESTIC HOT WATER LOOP/RECIRCULATION PIPING SUPPORTED ABOVE CEILING (TYPICAL).
8. ½" DOMESTIC COLD WATER PIPING DOWN IN WALL TO SERVE TOILET P-1 (TYPICAL).
9. ½" DOMESTIC HOT AND COLD WATER PIPING DOWN IN WALL TO SERVE SINK WITH POINT OF USE THERMOSTATIC MIXING VALVE TMV-3. REFER TO SHEET M8 BELOW PLUMBING FIXTURE SCHEDULE FOR MANUFACTURED/MODEL. (TYPICAL).
10. 1" DOMESTIC COLD WATER PIPE DOWN IN WALL TO P-1C FLOOR MOUNTED CLINIC SERVICE SINK.
11. EXTEND ½" DOMESTIC HOT AND COLD WATER LINE DOWN IN WALL TO SERVE P-2A NURSE WORK SINK. INSTALL A THERMOSTATIC TEMPERATURE CONTROLLER BELOW COUNTERTOP TMV-2. REFER TO SHEET M8 BELOW PLUMBING FIXTURE SCHEDULE FOR MANUFACTURED/MODEL. PROVIDE TEMPERATURE CONTROLLER WITH FACTORY OPTION STEEL CABINET WITH COVER MOUNTED ON WALL BELOW SINK.
12. ¾" DOMESTIC HOT AND COLD WATER PIPINGS DOWN IN WALL TO SERVE P-3 MOP SINK.
13. ¾" DOMESTIC HOT AND COLD WATER PIPING DOWN IN WALL TO SERVE SERVICE FAUCET. REFER TO SHEET M9, SECTION 15400, P-1C SPECIFICATIONS FOR MORE INFORMATION.
14. EXTEND ½" DOMESTIC HOT AND COLD WATER PIPING WITHIN WALL TO SERVE P-2C SCRUB SINK. INSTALL A BRADLEY, MODEL #S59-2005 BALANCED PRESSURE VALVE, ANTI-SCALD BALANCED PRESSURE VALVE, MOUNTED ON WALL ±4" ABOVE SCRUB SINK ON THE RIGHT HAND SIDE OF THE SINK. WALL MOUNTED ANTI-SCALD BALANCED PRESSURE VALVE TO WORK IN CONJUNCTION WITH INFRA-RED GOOSENECK FAUCET. REFER TO SHEET M8 FOR MORE INFORMATION.
15. ½" DOMESTIC COLD WATER PIPE DOWN IN WALL TO P-6 WATER FOUNTAIN.
16. BALL VALVE (TYPICAL).
17. CHECK VALVE (TYPICAL).
18. ½" DOMESTIC HOT AND COLD WATER PIPING DOWN IN WALL TO P-5 SHOWER SHOWER BALANCING VALVE.
19. ½" DOMESTIC HOT AND COLD WATER PIPING DOWN WITHIN WALL TO SERVE AMERICAN STANDARD FAUCET #8354.012 WITH BOTTOM BRACE, STOPS, 10" SPOUT, 3/4" HOSE THREAD ON SPOUT, INTEGRAL VACUUM BREAKER, AND ADJUSTABLE UNION COUPLINGS AS MANUFACTURED BY AMERICAN STANDARD. MOUNT SERVICE FAUCET ON WALL ±3'-0" ABOVE FINISHED FLOOR.
20. ½" DOMESTIC HOT AND COLD WATER PIPING DOWN IN WALL TO SERVE SINK WITH FILTRATION SYSTEM AND POINT OF USE THERMOSTATIC MIXING VALVE TMV-1. REFER TO SHEET M8 BELOW PLUMBING FIXTURE SCHEDULE FOR MANUFACTURED/MODEL OF TMV-1. BRANCH ½" DOMESTIC COLD WATER PIPING DOWN WITHIN WALL TO SERVE P-4 REFRIGERATOR ICE MAKER VALVE BOX.
21. ½" DOMESTIC COLD WATER PIPING DOWN IN WALL TO SERVE P-1A. PRIOR TO INSTALLATION COORDINATE EXACT LOCATION WITH THE ARCHITECT AND GENERAL CONTRACTOR IN THE FIELD. CONTRACTOR TO STUB PLUMBING FIXTURE P-1A THROUGH WALL AS REQUIRED AND SUPPLY SPRAY NOZZLE TO THE OWNER SEPARATELY AFTER THE PUNCH OUT DONE BY THE ARCHITECT.
22. CONTRACTOR TO FIELD VERIFY/LOCATE EXISTING GAS METER LOCATED OUTSIDE ON THE SOUTH END OF THE BUILDING AND EXTEND THE NEW GAS PIPING ON THE ROOF AND DOWN EXPOSED ON WALL TO THAT LOCATION FOR OUR NEW GAS METER. COORDINATE WITH THE LOCAL GAS COMPANY TO PROVIDE A NEW GAS HEADER TO HOUSE THE EXISTING GAS METER, ALONG WITH A NEW GAS METER TO SERVE OUR SPACE. REFER TO SHEET M6 FOR MORE INFORMATION.
23. ROUTE NATURAL GAS PIPING DOWN THROUGH ROOF WITHIN PITCH POCKET TO SERVE GAS FIRED WATER HEATER.
24. NATURAL GAS PIPING MOUNTED ON ROOF/PILLOW BLOCK. PROVIDE PILLOW BLOCK EVERY 10'-0" AND (2) AT EACH TURN (TYPICAL).
25. CONTRACTOR TO FIELD COORDINATE THE INSTALL OF THE INTAKE AND EXHAUST FLUES WITH THE GENERAL CONTRACTOR AND THE BUILDING OWNER WHERE TO EXIT THE PIPES. UP THROUGH THE FLAT ROOF AND/OR OUT THROUGH THE EXTERIOR WALL. INSTALL AND USE THE PIPE MATERIALS PER MANUFACTURER'S RECOMMENDATIONS. PROVIDE CONCENTRIC PIPE VENT KIT. EXHAUST FLUE MUST BE MOUNTED A MINIMUM OF 25'-0" FROM ANY OUTSIDE AIR FRESH AIR INTAKE HOODS. INSTALLATION MUST MEET CODE AND MANUFACTURER'S SIZING.
26. PROVIDE/INSTALL A 1½" WATER SUB METER MOUNTED ABOVE CEILING WITH REMOTE READOUT. SUB METER TO BE PURCHASED AND INSTALLED PER THE LOCAL CODE/CRITERIA. PRIOR TO INSTALL COORDINATE EXACT MOUNTING LOCATION WITH THE GENERAL CONTRACTOR.

WATER CALCULTIONS

ADDED FIXTURE UNITS THIS T.I.

3 LAV	2	FU = 6
3 WC (FLUSH TANK)	5	FU = 15
1 CLINICAL SINK	10	FU = 10
1 DF	.25	FU = .25
11 SINK	.7	FU =7.7
2 MS	3	FU = 6
1 SHOWER	1.4	FU = 1.4

TOTAL ADDED FIXTURE UNITS = 46.35 FIXTURE UNITS

EXISTING FIXTURE UNITS THIS BUILDING = 79.8
TOTAL FIXTURE UNITS = 126.15 @ 49.5 GPM
EXISTING 1-1/2" WATER METER @ MAXIMUM 80 GPM
DISTANCE FROM MAIN TO FURTHEST FIXTURE = 240'
EQUIVALENT LENGTH - 240' x 1.20 = 288'

APPROX. MAIN PRESSURE = 60 PSI

FIXTURE MIN.	= 20 PSI
ELEV. 10 x.43	= 4.3 PSI
METER DROP	= 5 PSI
RPBP	= 8 PSI

SYSTEM DROP = 37.3 PSI

(MAIN PRESSURE 60 PSI) - (SYSTEM DROP 37.3 PSI) = 22.7 PSI
22.7 PSI / 288 FT x 100 = 7 PSI/100' FOR FRICTION LOSS

PIPE SIZING CHART	TANK
1/2" = 3 GPM	3 FU
3/4" = 8 GPM	10 FU
1" = 18 GPM	26 FU
1 1/4" = 32 GPM	58 FU
1 1/2" = 48 GPM	119 FU

NOTE: PIPE SIZING CHART SIZED WITH 2012 IPC FIGURE E103.(5) @ 8 PSI/100' FOR FRICTION LOSS AND TABLE E103.3(3) FLUSH TANKS

ISSUED FOR ARIZONA STATE ASC PLAN REVIEW

Expires 3/31/18

dpce
don penn ■ consulting engineer
636 Westport Parkway Suite 300 Grapevine, Texas 76051 Phone 817-410-9866 Fax 817-251-9411

TENANT RENOVATIONS FOR:
LIFELINE
Access Center
325 S. Euclid Ave, Suite 109
Tucson, AZ 85719

Lifeline Vascular Access

InSync
ARCHITECTURAL DESIGNS, INC.
1213 Old Pylesville Road Whiteford, MD 21160 Fax 410-452-8046
Office 410-452-8006

0" 1" 2" 3"
1/8"=1'-0" 8' 16' 24'
1/4"=1'-0" 4' 8' 12'

FLOOR PLAN-NEW WORK (PIPING)

REVISIONS		
REV#	DATE	DESCRIPTION
#1	6/29/16	Permit Review Comments
	1/6/17	Arizona State ASC Plan Review

DRAWING NO. M4
SHEET OF
DATE 4/13/16 DRAWN BY DLJ
JOB NUMBER 11222 CHECKED BY DLJ

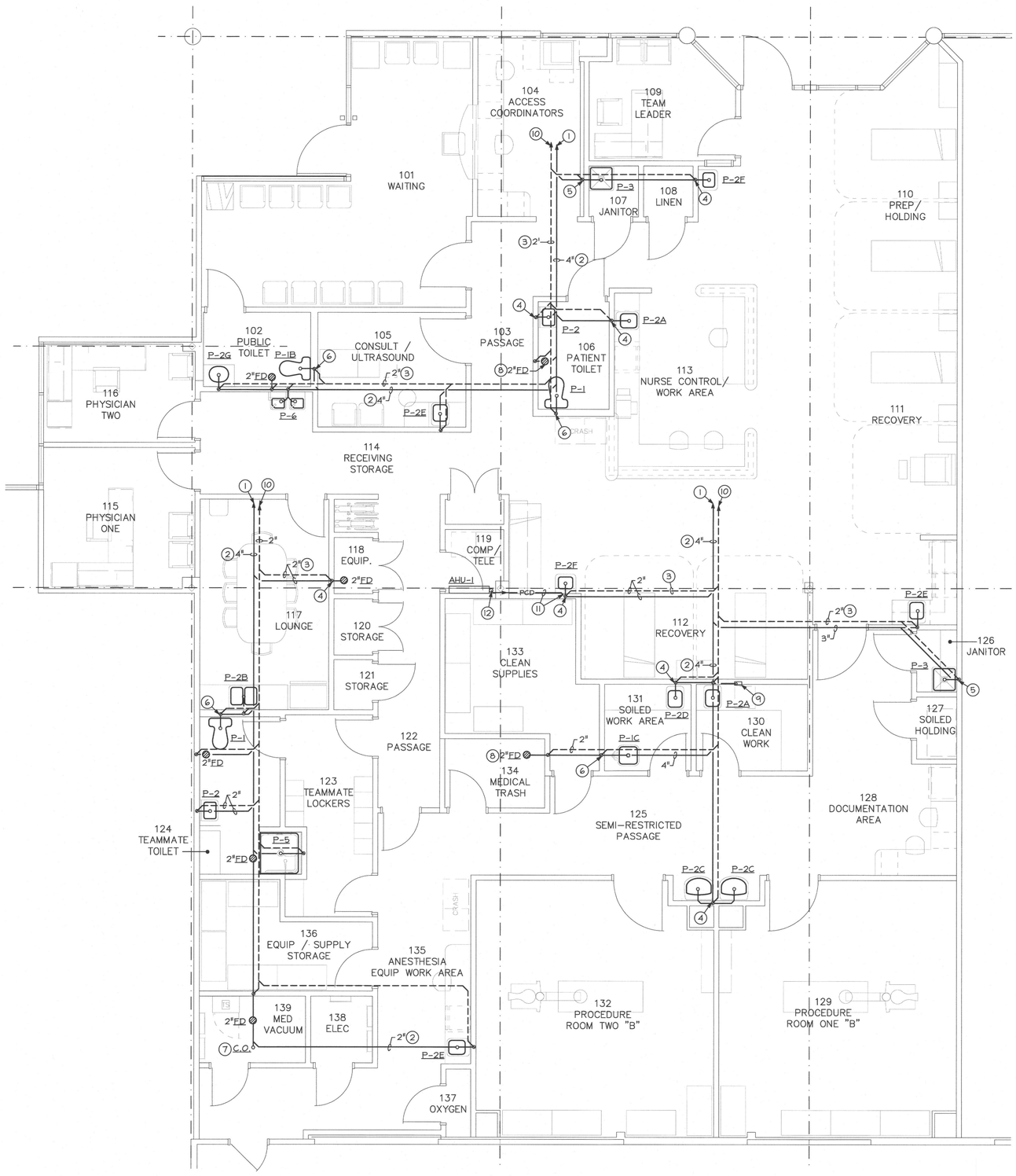

DRAWING NOTES

1. EXTEND AND CONNECT TO EXISTING SANITARY SEWER SERVICE BELOW SLAB. CONTRACTOR TO FIELD VERIFY/DETERMINE EXACT LOCATION, INVERT AND SLOPE/DIRECTION OF EXISTING SANITARY LINE BELOW SLAB AND MAKE PROPER CONNECTION.
2. SANITARY PIPING BELOW SLAB. SLOPE AT $\frac{1}{4}$" PER FOOT (TYPICAL).
3. SANITARY VENT PIPING SUPPORTED FROM STRUCTURE ABOVE CEILING (TYPICAL).
4. 2" SANITARY VENT PIPING UP AND 2" DOWN TO SANITARY PIPING (TYPICAL).
5. 2" SANITARY VENT PIPING UP AND 3" DOWN TO SANITARY PIPING.
6. 2" SANITARY VENT PIPING UP AND 4" DOWN TO SANITARY PIPING (TYPICAL).
7. FLOOR CLEANOUT (TYPICAL).
8. FLOOR DRAIN (TYPICAL).
9. OUTLET BOX TO BE MOUNTED. ±24" A.F.F BELOW COUNTERTOP AS MANUFACTURED BY SIOUX CHIEF, SERIES #696. (DRAIN BOX ONLY). PRIOR TO INSTALL COORDINATE EXACT MOUNTING LOCATION WITH THE GENERAL CONTRACTOR.
10. CONTRACTOR TO FIELD VERIFY/LOCATE EXISTING 3" SANITARY VENT PIPE THROUGH AND EXTEND TO FOR PROPER CONNECTION. MAINTAIN A MINIMUM OF 15'-0" FROM ANY FRESH AIR INTAKES
11. CONTRACTOR TO FIELD VERIFY AND EXTEND CONDENSATE DRAIN LINE ABOVE CEILING (SLOPED ABOVE FROM UNIT) AND EXTEND DOWN WITHIN WALL TO TAILPIECE OF SINK.
12. PROVIDE/INSTALL $\frac{3}{4}$" CONDENSATE DRAIN WITH TRAP AT AIR HANDLING UNIT AND CONNECT BEHIND UNIT CAVITY WITH CONDENSATE PUMP. EXTEND CONDENSATE PIPE UP ABOVE THE CEILING.

NOTE:
BECAUSE EXISTING SANITARY AND VENTING LAYOUT HAS NOT BEEN ASCERTAINED IT IS LIKELY THAT THE PROPOSED LAYOUT FOR THE NEW FACILITY WILL NEED TO BE MODIFIED. IF THE CONFIGURATION OF THE SANITARY LINES MUST BE CHANGED TO ACCOMMODATE ACTUAL LOCATIONS OF EXISTING SANITARY LINES, SUBMIT A REVISED PLAN (AND RISER DIAGRAMS) TO THE CITY OF TUCSON AS A REVISION PRIOR TO INSTALLATION.

FLOOR PLAN-EXISTING CONDITIONS/ NEW WORK (PLUMBING)

SCALE: 1/4"=1'-0"

DE-DUCT ALTERNATE

THE CONTRACTOR SHALL PROVIDE THE OWNER A DE-DUCT ALTERNATE OPTION TO UTILIZE SCHEDULE 40 DWV PVC PIPING UNDERGROUND/BELOW SLAB IN LIEU OF THE SPECIFIED CAST IRON SOIL PIPING.

ISSUED FOR ARIZONA STATE ASC PLAN REVIEW

Expires 3/31/18

dpce
don penn ■ consulting engineer
638 Westport Parkway
Suite 300
Grapevine, Texas 76051
Phone: 817-410-2858
Fax: 817-251-9411

TENANT RENOVATIONS FOR:
LIFELINE
Access Center
325 S. Euclid Ave. Suite 109
Tucson, AZ 85719

Lifeline Vascular Access

InSync
ARCHITECTURAL DESIGNS, INC.
1213 Old Pylesville Road Whiteford, MD 21160
Office 410-452-8006 Fax 410-452-8046

0" 1" 2" 3"
1/8"=1'-0" 8' 16' 24'
1/4"=1'-0" 4' 8' 12'

FLOOR PLAN-NEW WORK (PLUMBING)

REVISIONS		
REV#	DATE	DESCRIPTION
#1	6/29/16	Permit Review Comments
	1/6/17	Arizona State ASC Plan Review

DRAWING NO. M5
SHEET OF
DATE 4/13/16 DRAWN BY DLJ
JOB NUMBER 11222 CHECKED BY DLJ

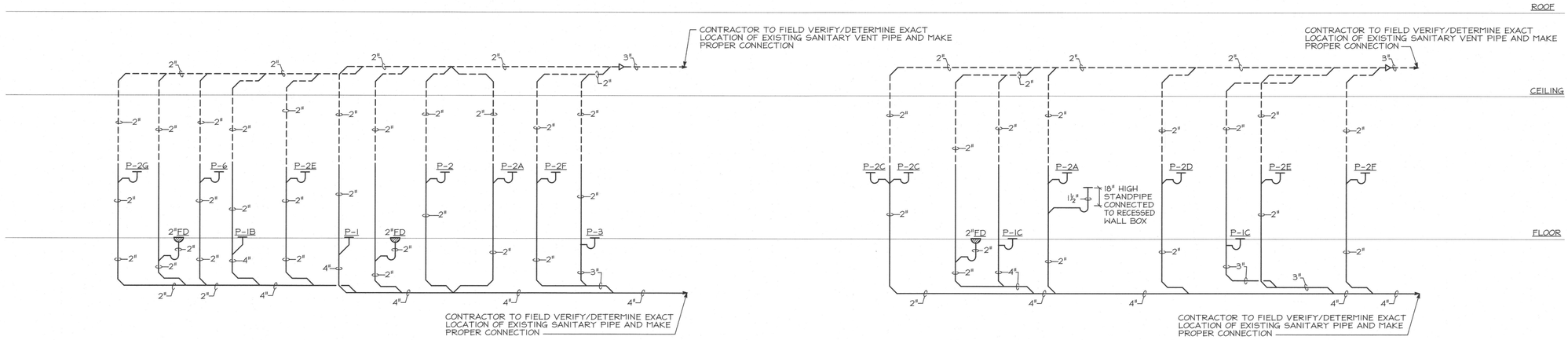

SANITARY RISER DIAGRAM

NO SCALE

NOTES:

1) PRIOR TO INSTALL OF SANITARY PIPE, THE CONTRACTOR MUST VERIFY THE INVERT ELEVATIONS FOR PROPER INSTALL.
2) ALL TRAPS FOR FLOOR DRAINS SERVING THE TOILET ROOMS TO BE PRIMED FROM THE NEAREST TOILET.
3) ALL TRAPS FOR FLOOR DRAINS TO BE PRIMED THROUGHOUT THE SPACE. PLUMBING CONTRACTOR TO BE SURE ALL TRAPS FOR EACH FLOOR DRAIN TO BE PRIMED. IF NOT SHOWN THEN PROVIDE/INSTALL A PPP TRAP PRIMER AS REQUIRED (MED VAC., MED. TRASH, JAN.CLOSET, ETC). ALSO INSTALL/PROVIDE PPP TRAP PRIMER FOR RECESSED WALL BOX TRAP.

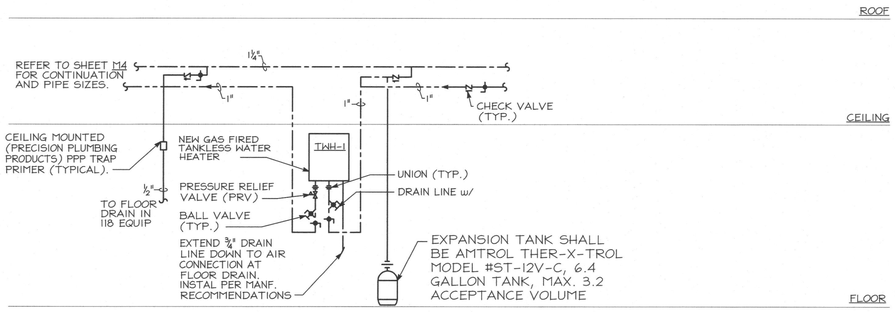

NOTE: FIELD ADJUST TANK AIR PRESSURE IN ACCORDANCE TO MANUFACTURER INSTALLATIONS.

DOMESTIC WATER RISER DIAGRAM

NO SCALE

NOTES:

1) ALL TRAPS FOR FLOOR DRAINS SERVING THE TOILET ROOMS TO BE PRIMED FROM THE NEAREST TOILET.
2) ALL TRAPS FOR FLOOR DRAINS TO BE PRIMED THROUGHOUT THE SPACE. PLUMBING CONTRACTOR TO BE SURE ALL TRAPS FOR EACH FLOOR DRAIN TO BE PRIMED. IF NOT SHOWN THEN PROVIDE/INSTALL A PPP TRAP PRIMER AS REQUIRED (MED VAC., MED. TRASH, JAN.CLOSET, ETC). ALSO INSTALL/PROVIDE PPP TRAP PRIMER FOR RECESSED WALL BOX TRAP.
3) ALL SINKS REQUIRED TO HAVE INSTALLED A POINT OF USE OF USE THERMOSTATIC MIXING VALVE, EXCEPT THE SCRUB SINK. REFER TO SHEET M8, BELOW PLUMBING FIXTURE SCHEDULE FOR MORE INFORMATION.
4) PLUMBING CONTRACTOR TO INSTALL THE WATER HEATER OER THE MANUFACTURER'S RECOMMENDATIONS.

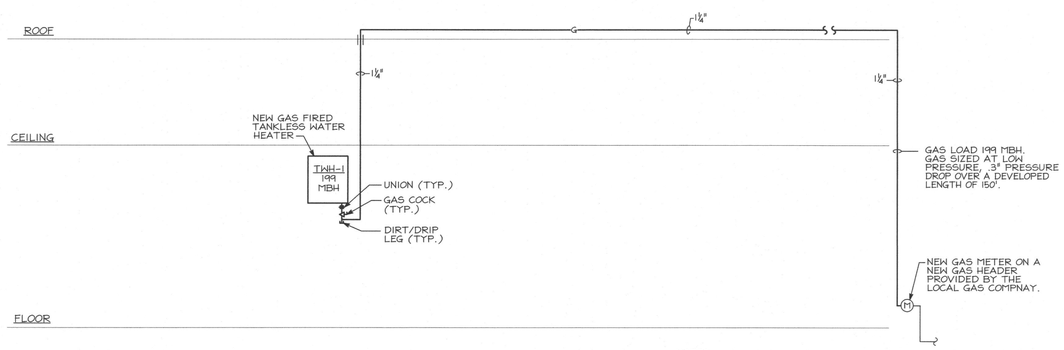

NATURAL GAS RISER DIAGRAM

NO SCALE

NOTES:

1) GAS SERVICE BY LOCAL GAS COMPANY. THE END USER SERVICE WANTS TO BE LOW PRESSURE (7" to 11" w.c. at the equipment.).
2) GAS PIPING WAS SIZED PER A 160' LENGTH AND A LOW PRESSURE GAS SYSTEM. IF ONE OR BOTH ARE DIFFERENT FROM THIS IN THE FIELD THAN THE CONTRACTOR MUST CONTACT THE ENGINEER PRIOR TO INSTALL FOR ANY CHANGES THAT MAY NEED TO BE DONE.
3) THE GAS CONNECTED LOAD INDICATED ON THIS RISER DIAGRAM REPRESENTS THE BTUH INPUT AT SEA LEVEL. CHANGE THE ORIFICES IN THE BURNERS ONLY IF REQUIRED PER THE REGION'S ELEVATION.

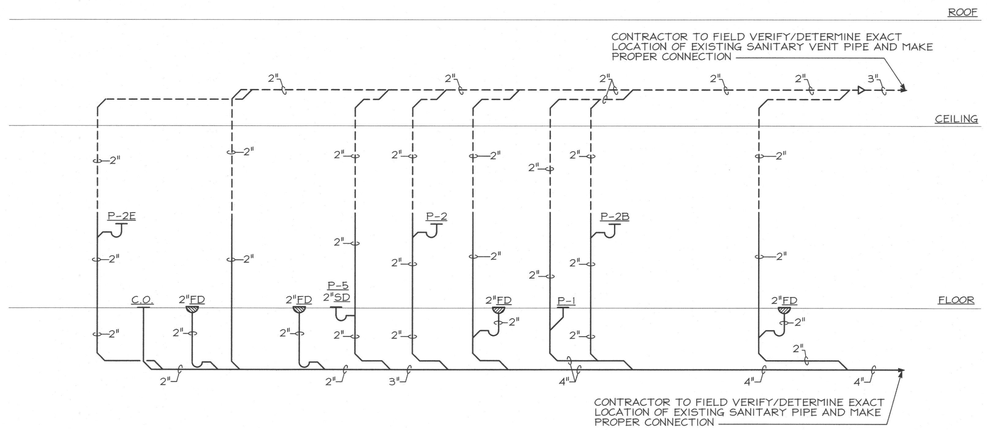

SANITARY RISER DIAGRAM

NO SCALE

NOTES:

1) PRIOR TO INSTALL OF SANITARY PIPE, THE CONTRACTOR MUST VERIFY THE INVERT ELEVATIONS FOR PROPER INSTALL.
2) ALL TRAPS FOR FLOOR DRAINS SERVING THE TOILET ROOMS TO BE PRIMED FROM THE NEAREST TOILET.
3) ALL TRAPS FOR FLOOR DRAINS TO BE PRIMED THROUGHOUT THE SPACE. PLUMBING CONTRACTOR TO BE SURE ALL TRAPS FOR EACH FLOOR DRAIN TO BE PRIMED. IF NOT SHOWN THEN PROVIDE/INSTALL A PPP TRAP PRIMER AS REQUIRED (MED VAC., MED. TRASH, JAN.CLOSET, ETC). ALSO INSTALL/PROVIDE PPP TRAP PRIMER FOR RECESSED WALL BOX TRAP.

ISSUED FOR ARIZONA
STATE ASC PLAN REVIEW

CERTIFICATE NO. 31050 — Registered Professional Engineer — Expires 3/31/18

dpce
don penn ▪ consulting engineer
635 Westport Parkway
Suite 300
Grapevine, Texas 76051
Phone: 817-410-2868
Fax: 817-251-9411

TENANT RENOVATIONS FOR:
LIFELINE
Access Center
325 S. Euclid Ave, Suite 109
Tucson, AZ 85719

Lifeline Vascular Access

InSync
ARCHITECTURAL DESIGNS, INC.
213 Old Pylesville Road Whiteford, MD 21160
Office 410-452-8006 Fax 410-452-8046

1/8"=1'-0" 8' 16' 24'
1/4"=1'-0" 4' 8' 12'

RISER DIAGRAMS

REVISIONS		
REV#	DATE	DESCRIPTION
#1	6/29/16	Permit Review Comments
	1/6/17	Arizona State ASC Plan Review

DRAWING NO. M6
SHEET OF
DATE 4/13/16 DRAWN BY DLI
JOB NUMBER 11222 CHECKED BY DLI

A B C D E F G H
1 2 3 4 5 6 7 8 9

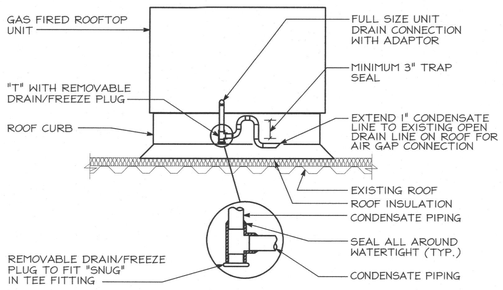

ROOFTOP UNIT CONDENSATE TRAP DETAIL

NO SCALE

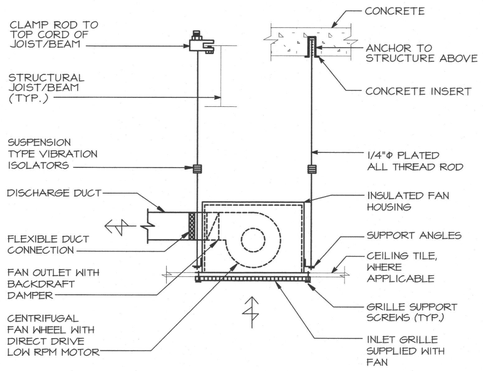

CEILING MOUNTED EXHAUST FAN DETAIL

NO SCALE

NOTE:

1) PROVIDE VARIABLE SPEED SWITCH ON THE SIDE OF THE CASING FOR FINAL AIR BALANCE.

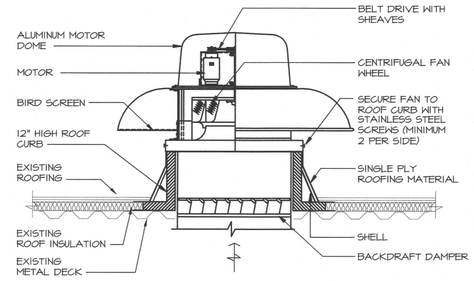

ROOF MOUNTED EXHAUST FAN DETAIL

NO SCALE

NOTES:

1) ROOF CURBS MUST BE DESIGNED FOR STANDING SEAM METAL ROOF INSTALL.

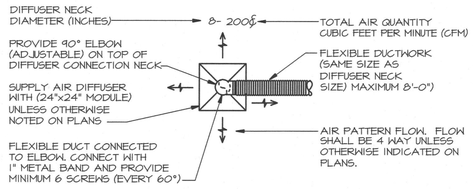

SUPPLY AIR DIFFUSER KEY

NO SCALE

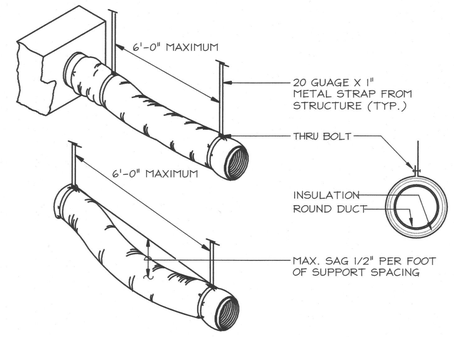

FLEXIBLE DUCT RUN-OUT SUPPORT DETAIL

NO SCALE

NOTES:

1) FLEXIBLE DUCT SHOULD EXTEND STRAIGHT FOR SEVERAL INCHES FROM RECTANGULAR DUCT CONNECTION BEFORE BENDING.

2) FLEXIBLE DUCT SHOULD NOT EXCEED 6'-0" IN LENGTH. USE RIGID ROUND DUCTWORK WHEN ROUNDOUTS EXCEED

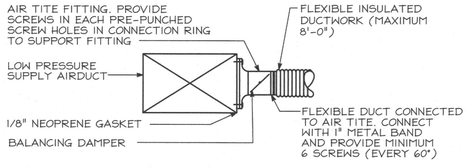

AIR TITE FITTING DETAIL

NO SCALE

AIR TITE SIZE CHART			
DUCTSIZE	CONNECTION RING	DUCTSIZE	CONNECTION RING
5"	8"	9"	12"
6"	9"	10"	13"
7"	10"	11"	14"
8"	11"	12"	15"

NOTE:

1) WHERE CONNECTION RING SIZE IS LARGER THAN SUPPLY DUCT, THEN CONNECTION RING SHALL BE CRIMPED OVER DUCT AND CONNECTED, SCREWED AND SEALED ON TOP AND BOTTOM OF SUPPLY DUCT.

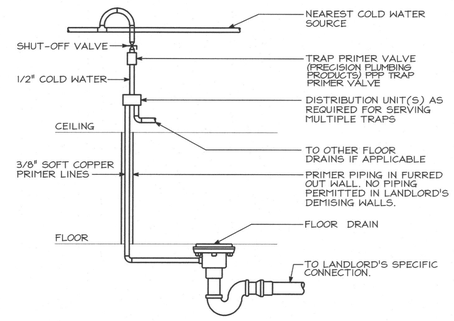

FLOOR DRAIN AND TRAP PRIMER DETAIL

NO SCALE

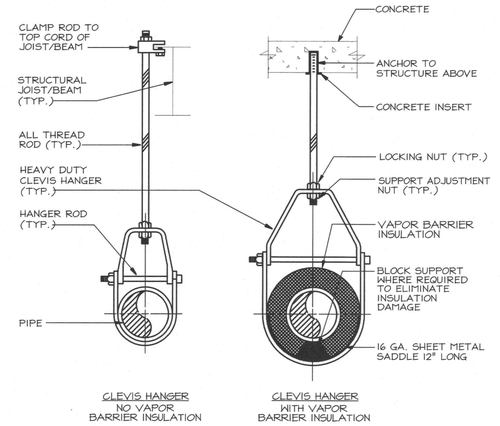

PIPE SUPPORT DETAIL

NO SCALE

NOTE:

1) ALL HANGERS FOR COPPER PIPING SHALL BE COPPER COATED.

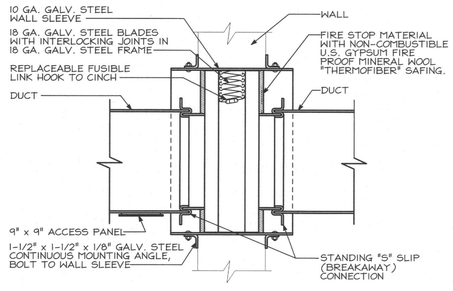

HORIZONTAL DUCT FIRE DAMPER DETAIL

NO SCALE

NOTES:

1. FIRE DAMPERS TO HAVE BREAKAWAY JOINT BETWEEN COLLARS AND DUCT. (COLLARS SHALL BE INTEGRAL WITH FIRE DAMPERS FRAME.)
2. FIRE DAMPER SHALL BE U.L. LABELED (MIN 1 HR).
3. ACCESS PANELS ARE REQUIRED FOR EVERY FIRE DAMPER LOCATION. THIS MUST BE CLEARLY/NEATLY IDENTIFY ON THE CEILING GRID WITH 1/2" HIGH LETTERS JUST BELOW EACH FIRE DAMPER ACCESS PANEL.

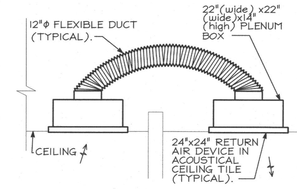

AIR TRANSFER ASSEMBLY

NO SCALE

ISSUED FOR ARIZONA
STATE ASC PLAN REVIEW

dpce
don penn ■ consulting engineer
635 Westport Parkway
Suite 300
Grapevine, Texas 76051
Phone: 817-410-2666
Fax: 817-251-6411

TENANT RENOVATIONS FOR:
LIFELINE
Access Center
325 S. Euclid Ave, Suite 109
Tucson, AZ 85719

Lifeline Vascular Access

InSync
ARCHITECTURAL DESIGNS, INC.
1213 Old Pylesville Road Whiteford, MD 21160
Office 410-452-8026 Fax 410-452-8046

0" 1" 2" 3"
1/8"=1'-0" 8' 16' 24'
1/4"=1'-0" 4' 8' 12'

DETAILS

REVISIONS		
REV#	DATE	DESCRIPTION
#1	6/29/16	Permit Review Comments
	1/6/17	Arizona State ASC Plan Review

DRAWING NO. M7
SHEET OF
DATE 4/13/16 DRAWN BY DLJ
JOB NUMBER 11222 CHECKED BY DLJ

Expires 03/14/18

SEQUENCE OF OPERATION

ROOFTOP UNITS:

1 DURING OCCUPIED PERIOD AS PROGRAMMED ON ASSOCIATED ROOFTOP THERMOSTAT, BLOWER FAN SHALL RUN CONTINUOUSLY AND OUTSIDE AIR DAMPERS OPEN TO MAXIMUM POSITION.

2 ON A CALL FOR HEATING, COMPRESSOR SHALL BE ENERGIZED AND SHALL RUN UNTIL SETPOINT IS SATISFIED.

3 DURING NIGHT SETBACK PERIOD AS PROGRAMMED ON ASSOCIATED ROOFTOP UNIT THERMOSTAT, BLOWER FAN SHALL BE OFF AND OUTSIDE AIR DAMPERS SHUT TO IT'S SCHEDULED MINIMUM POSITION. ON A CALL FOR HEATING OR COOLING, THE OUTSIDE AIR DAMPERS SHALL REMAIN CLOSED AND THE FAN OR ASSOCIATED ELECTRIC HEATING COIL OR COMPRESSOR CYCLE UNTIL SPACE SETPOINTS ARE SATISFIED.

4 UNIT SHALL BE DE-ENERGIZED IF EXISTING SMOKE DETECTOR SENSES SMOKE OR ANY SAFETY/CONTROL EXCEEDS ITS LIMITS.

ENTHALPY ECONOMIZER CONTROL (ROOFTOP RTU-3 & 4 ONLY):

5 WHEN THE OUTDOOR AIR TEMPERATURE IS BELOW 70°F, THE ENTHALPY OF THE OUTDOOR AIR IS LOWER THAN THE ENTHALPY OF THE RETURN AIR, THE SPACE TEMPERATURE IS ABOVE THE SETPOINT THE OUTDOOR AIR DAMPER SHALL MODULATE OPEN, THE RELIEF/POWER EXHAUST SHALL ENERGIZE PROPORTIONALLY TO THE BUILDING PRESSURE ALONG WITH AIR DAMPER SHALL MODULATE OPEN AND THE RETURN AIR DAMPER SHALL MODULATE CLOSED PROPORTIONALLY TO MAINTAIN THE DISCHARGE AIR SETPOINT OF 55°F (ADJUSTABLE). A DIFFERENTIAL PRESSURE SENSOR SHALL MONITOR BUILDING PRESSURE AND ENERGIZE THE POWER EXHAUST AS REQUIRED TO MAINTAIN PROPER BUILDING PRESSURE.

** RTU-1, & RTU-2 SHALL OPERATE IN THE OCCUPPIED MODE 24/7 AND DURING THE UNOCCUPIED PERIOD THE OUTSIDE AIR DAMPERS SHALL MODULATE TO IT'S MINIMUM POSITION. BOTH OF THESE ROOFTOP UNITS WILL GO INTO A NIGHT TEMPERATURE SETBACK LIKE THE OTHERS (5) FIVE ROOFTOP UNITS DURING THE UNOCCUPIED MODE AS SCHEDULED BELOW.

**ALL ROOFTOP UNITS DURING UNOCCUPIED MODES WILL HAVE NIGHT TEMPERATURE NIGHT SETBACK AS FOLLOWS:

RTU-3, RTU-4, RTU-5, RTU-6, & RTU-7 ROOFTOP UNIT COOLING NIGHT SETBACK TEMPERATURE TO BE 76°F AND HEATING SETPOINT TO BE 68°F.

RTU-1 & RTU-2 COOLING NIGHT SETBACK TEMPERATURE TO BE 70°F AND HEATING SETPOINT TO BE 60°F.

**ALL OCCUPIED AND UNOCCUPIED MODES ARE TO BE SET FOR THE SAME TIME FOR ALL THE ROOFTOP UNITS.

**RTU-4 AND RTU-6 WILL UTILIZE SPACE TEMPERATURE SENSORS TO SEND AN AVERAGING TEMPERATURE BACK TO A PROGRAMMABLE CONTROL MODULE FOR TEMPERATURE READINGS. CARRIER 33CS.

EXHAUST/VENTILATION FANS

1 ROOF MOUNTED EXHAUST FAN F-1 SHALL BE INTERLOCKED WITH NEW RTU-3 (THROUGH RTU-3 THERMOSTAT). UPON ACTIVATION OF OCCUPIED MODE FOR RTU-3, EXHAUST FAN SHALL BE ENERGIZED AND REMAIN ENERGIZED UNTIL RTU-3 GOES INTO THE UNOCCUPIED MODE.

2 ROOF MOUNTED EXHAUST FAN F-2 SHALL BE INTERLOCKED WITH NEW RTU-7 (THROUGH RTU-7 THERMOSTAT). UPON ACTIVATION OF OCCUPIED MODE FOR RTU-7, EXHAUST FAN SHALL BE ENERGIZED AND REMAIN ENERGIZED UNTIL RTU-7 GOES INTO THE UNOCCUPIED MODE.

3 EXHAUST FAN F-3 SHALL OPERATE 24 HOURS/7 DAYS A WEEK.

4 COMP/TELE ROOM EXHAUST FAN F-4 SHALL BE INTERLOCKED WITH WALL MOUNTED REVERSE ACTING THERMOSTAT. UPON A RISE IN SPACE TEMPERATURE ABOVE (78°F ADJUSTABLE) FAN SHALL BE ENERGIZED. MAKE-UP AIR SHALL BE TRANSFERRED FROM ADJACENT STORAGE SPACE. FAN SHALL RUN UNTIL SETPOINT IS SATISFIED. UPON SATISFYING THERMOSTAT SETPOINT FAN SHALL BE DE-ENERGIZED.

ELECTRIC DUCT HEATER

1 ELECTRIC DUCT HEATER SHALL BE INTERLOCKED WITH HEATING ONLY REMOTE THERMOSTAT AND DUCT MOUNTED SENSOR (SETPOINT 71°F). UPON AIRFLOW AIR PROVING SWITCH, BEING SATIFIED, SHALL ALLOW ELECTRIC HEATER TO BE ENERGIZED UPON A CALL FOR HEAT. UPON REACHING SETPOINT HEATER SHALL BE DE-ENERGIZED.

HUMIDIFIER

1 REFER TO DETAIL ON SHEET FOR MORE INFORMATION. THE "STAND ALONE" HUMIDIFICATION SETPOINT IS TO BE SET FOR 40% RH.

** FROM APRIL THROUGH OCTOBER THE HUMIDIFIER IS TO BE SET DOWN TO 30% RH. FROM OCTOBER TO APRIL THE HUIMIDIFIER IS TO BE SET AT 40% RH.

PROCEDURE ROOM AIRFLOW STATION

**ALL NEW AAON UNITS WILL THAT SERVE THE PROCEDURE ROOM WILL HAVE AN AIRFLOW STATION. AIRFLOW READINGS WILL BE PROVIDED FOR THE SUPPLY, RETURN AND FRESH AIRFLOWS.
INSTALL AIRFLOW PROBES IN THE SUPPLY, RETURN AND FRESH AIR DUCT MAINS. PARAGON CONTROLS, INC (PCI) WILL BE USED TO ACCOMPLISH THIS. A MicroTransEQ AIRFLOW SIGNAL PROCESSOR WILL BE UTLIZE WITH THE AIRFLOW STATION WHICH WILL COMMUNICATE BACK TO THE Wattsmaster CONTROLLER AND PRISM SOFTWARE.
CONTACT Jeff Cox at HAVTECH 410-724-3703 FOR PARAGON EQUIP.

PACKAGED HEAT PUMP ROOFTOP UNIT SCHEDULE "CARRIER"

ITEM#	AREA SERVED	NOMINAL TONS	FAN DATA C.F.M.	FAN DATA E.S.P.	FAN DATA B.H.P.	FAN DATA R.P.M.	FAN DATA C.F.M. O.A.	COOLING DATA TOTAL BTU/HR	COOLING DATA SENSIBLE BTU/HR	COOLING DATA EER	HEATING DATA TYPE	HEATING DATA BTU/HR.	HEATING DATA K.W.	HI-TEMP. HEAT 47 O.A.T. BTU/HR.	HI-TEMP. K.W.	HI-TEMP. C.O.P	LOW-TEMP. HEAT 17 O.A.T. BTU/HR.	LOW-TEMP. K.W.	LOW-TEMP. C.O.P	ELECTRICAL DATA	WEIGHT (LBS.)	MODEL #	MANUFACTURER	REMARKS
RTU-3	WAITING AREA	4	1,495	.60"	1.0	800	240	40,600	40,600	11.20	ELECTRIC	-	-	45,500	-	-	23,600	-	-	208v/3Φ/60HZ	800	50TCQA05	CARRIER	NEW
RTU-4	ACCESS COORDINATORS AND TEAM LEADER	4	1,395	.75"	1.0	900	100	37,400	37,400	11.20	ELECTRIC	-	-	45,500	-	-	23,600	-	-	208v/3Φ/60HZ	800	50TCQA05	CARRIER	NEW
RTU-5	NURSE CONTROL WORK AREA AND PREP/HOLDING/RECOVERY	4	1,435	.80"	1½	1,034	200	34,600	34,600	11.20	ELECTRIC	-	-	45,500	-	-	23,600	-	-	208v/3Φ/60HZ	800	50TCQA05	CARRIER	NEW
RTU-6	PHYSICIANS OFFICES, LOUNGE CONSULT ULTRASOUND, ETC.	3	1,225	.95"	1½	1,030	180	32,000	32,000	11.0	ELECTRIC	-	-	35,600	-	-	18,200	-	-	208v/3Φ/60HZ	740	50TCQA04	CARRIER	NEW
RTU-7	SEMI-RESTRICTED PASSAGE, CLEAN WORK, MED VACUUM, ETC.	4	1,535	.80"	1½	1,034	200	38,000	38,000	11.20	ELECTRIC	-	-	45,500	-	-	23,600	-	-	208v/3Φ/60HZ	800	50TCQA05	CARRIER	NEW

1,115

NOTES:

1) ROOFTOP UNITS #3 AND 4 TO BE PROVIDED WITH FULL MODULATING OUTSIDE AIR DAMPER, FACTORY SUPPLIED ENTHALPY ECONOMIZER WITH BAROMETRIC RELIEF AND DIRECT DRIVE MOTORS.
2) ROOFTOP UNITS #5, 6 AND 7 TO BE PROVIDED WITH FULL MODULATING OUTSIDE AIR DAMPER AND BELT DRIVEN MOTORS.
3) PRIOR TO INSTALL OF THESE THE NEW ROOFTOP UNITS THE CONTRACTOR MUST HAVE THEM REVIEWED BY A STRUCTURAL TO BE INSTALLED ON THE EXISTING ROOF.
4) COOLING TEMPERATURE SETPOINT TO BE 74°F AND HEATING SETPOINT TO BE 70°F.
5) ALL ROOFTOP UNITS CAPACITIES ARE BASED ON 117°F db/67°F wb AMBIENT TEMPERATURE WITH 85°F EDB AND 60°F EWB.
6) EACH ROOFTOP UNIT TO BE PROVIDED WITH 18" HIGH ROOF CURBS.
7) ALL ROOFTOP UNITS ARE SINGLE STAGE WITH SINGLE SPEED INDOOR FAN MOTOR.
8) THE ELECTRICAL CONTRACTOR TO PROVIDE THE DISCONNECT SWITCH FOR THE CARRIER UNITS AND FACTORY OPTION POWERED GFI CONVENIENCE OUTLETS WILL BE PROVIDED WITH THE UNIT AND POWERED THROUGH THE ROOFTOP UNIT.
9) ALL PACKAGED ROOFTOP UNITS TO BE PROVIDED WITH 24 HOURS/7DAY PROGRAMMABLE THERMOSTATS.

PACKAGED HEAT PUMP ROOFTOP UNIT SCHEDULE "AAON"

ITEM#	AREA SERVED	FAN DATA C.F.M.	FAN DATA E.S.P.	FAN DATA B.H.P.	FAN DATA R.P.M.	FAN DATA C.F.M. O.A.	COOLING DATA TOTAL BTU/HR	COOLING DATA SENSIBLE BTU/HR	COOLING DATA EER	HEATING DATA TYPE	HEATING DATA BTU/HR.	HEATING DATA K.W.	HI-TEMP. HEAT 47 O.A.T. BTU/HR.	HI-TEMP. K.W.	HI-TEMP. C.O.P	LOW-TEMP. HEAT 17 O.A.T. BTU/HR.	LOW-TEMP. K.W.	LOW-TEMP. C.O.P	HSPF	ELECTRICAL DATA	WEIGHT (LBS.)	MODEL #	MANUFACTURER
RTU-1	PROCEDURE ROOM 129	1,350	2.5"	2	2,009	140 min. / 270 max.	41,830	41,830	13.65	ELECTRIC	25,598	7.5	61,900	-	3.38	37,100	-	2.61	N/A	208v/3Φ/60HZ	1,014	RQ-005-8-H-E609-11A: L000-EOH-QKD-0AC-DDEFHBZ-00-00A0000TB	AAON
RTU-2	PROCEDURE ROOM 132	1,350	2.5"	2	2,009	140 min. / 270 max.	41,830	41,830	13.65	ELECTRIC	25,598	7.5	61,900	-	3.38	37,100	-	2.61	N/A	208v/3Φ/60HZ	1,014	RQ-005-8-H-E609-11A: L000-EOH-QKD-0AC-DDEFHBZ-00-00A0000TB	AAON

NOTES:

1) EACH ROOFTOP UNIT WILL HAVE CAPACITIES CONTROLS DOWN TO WITHIN 10% OF TOTAL CAPACITY WITH MODULATING COMPRESSORS, DIRECT DRIVE SUPPLY FAN WITH VFD, MODULATING HOT GAS REHEAT FOR DEHUMIDIFICATION, UNIT CASING WITH SOLID DOUBLE WALL CONSTRUCTION WITH FOAM INSULATION AND STAINLESS STEEL DRAIN PAN. ALSO ROOFTOP UNIT TO HAVE FACTORY SUPPLIED 2" MERV 8 FILTERS IN THE RETURN. CONTROLS TO BE PROVIDED IS THE AAON SYSTEM MANAGER TO BE LOCATED IN THE SITE MANAGER'S OFFICE WITH REMOTE TEMPERATURE/HUMIDITY SENSORS TO BE LOCATED IN EACH PROCEDURE ROOM. THE REMOTE TEMPERATURE/HUMIDITY SENSOR WILL ALLOW ONLY THE TEMPERATURE TO BE ADJUSTED IN THE PROCEDURE ROOMS IF SO DESIRED AND NOTHING ELSE. DOWNLOAD THE "PRISM" SOFTWARE ONTO THE TENANT PC. INTERLOCK WITH THE SYSTEM MANAGER TO ALLOW FOR WEB BASE INTERNET ACCESS. AAON ROOFTOP UNITS ARE TO ONLY BE INSTALLED AND COMMISIONED BY FACTORY TRAINED/CERTIFIED CONTRACTORS. PROVIDE OUTSIDE AIR DAMPER OPERATION SO THAT MINIMUM OUTSIDE AIRFLOW IS OBTAINED DURING UNOCCUPIED MODE AND MAXIMUM OUTSIDE AIRFLOW IS OBTAINED DURING OCCUPIED MODE AS SCHEDULED ABOVE.
2) AAON ROOFTOP UNIT COOLING TEMPERATURE SETPOINT TO BE 66°F AND HEATING SETPOINT TO BE 63°F.
3) THE ELECTRICAL CONTRACTOR TO PROVIDE THE DISCONNECT SWITCH FOR THE AAON UNIT AND POWERED GFI CONVENIENCE OUTLETS WILL BE PROVIDED WITH THE UNIT AND POWERED THROUGH THE ROOFTOP UNIT. ALSO PROVIDE 18" HIGH ROOF CURB FOR ROOFTOP UNIT #1 AND #2.
4) BOTH ROOFTOP UNITS CAPACITIES ARE BASED ON 117°F db/67°F wb AMBIENT TEMPERATURE
5) CONTRACTOR WILL (NO SUBSTITUTES) ONLY PURCHASE/OBTAIN THE AAON EQUIPMENT FROM THE FOLLOWING: CONTACT: GRAHAME ELDRIDGE WITH WINDY CITY REPRESENTATIVES
Phone (630) 590-6933
CELL (708) 790-1122

GAS FIRED TANKLESS WATER HEATER SCHEDULE

ITEM #	AREA SERVED	BTU/HR INPUT	SIZE HEIGHT x WIDTH X DEPTH	RECOVERY RATE (GPH) 65° RISE	TANK CAPACITY (GALLONS)	PIPE CONNECTIONS (INCHES) INLET	PIPE CONNECTIONS (INCHES) OUTLET	ELECTRICAL DATA	MANUFACTURER/ MODEL #
TWH-1	TOILET RMS, LOUNGE, RECOVERY AREA, ETC.	199,000	26"x18½"x10"	-	-	¾"	¾"	120V/1Φ/60HZ	RINNAI/ RUR98i

NOTE:
1) PROVIDE 65°F TEMPERATURE WATER RISE FOR 60°F ENTERING WATER TEMPERATURE.

FAN SCHEDULE

ITEM #	AREA SERVED	C.F.M.	E.S.P.	HP/WATTS	R.P.M.	CONTROL	ELEC. DATA	SONES	MODEL #	MFGR.
F-1	TOILET ROOMS AND JANITOR CLOSET	185	.375"	.167 HP	1,341	INTERLOCK W/ ROOFTOP UNIT #3	120v/1Φ	7.6	70 ACEB	COOK
F-2	JANITORS CLOSET AND MED VAC	320	.45"	.167 HP	1,258	INTERLOCK W/ ROOFTOP UNIT #7	120v/1Φ	5.0	80 ACEB	COOK
F-3	TRASH ROOM AND SOILED LINEN AREA	165	.375"	.167 HP	1,222	24 HOURS/ 7 DAYS A WEEK	120v/1Φ	6.3	70 ACEB	COOK

NOTE:
1) MANUFACTURER FAN SELECTIONS SHALL INCLUDE EXTERNAL PRESSURE DROP AND FAN DRIVE LOSS.

ELECTRONIC DAMPER SCHEDULE

ITEM#	AREA SERVED	INLET SIZE	C.F.M.	MIN. C.F.M.	VELOCITY F.P.M.	PRESSURE DROP (IN WG.)	MODEL#	MANUFACTURER
1	CONSULTANT/ ULTRASOUND	8"Φ	300	200	850	.15	33ZCDR-08	CARRIER
2	PHYSICIAN TWO	10"Φ	570	400	1,000	.18	33ZCDR-10	CARRIER
3	PHYSICIAN ONE	6"Φ	240	160	1,200	.20	33ZCDR-08	CARRIER
4	TEAM LEADER	8"Φ	395	250	1,200	.20	33ZCDR-08	CARRIER

NOTES:
1) ELECTRICAL CONTRACTOR WILL PROVIDE 120/1Φ POWER CONNECTION TO BOX ABOVE UNLESS OTHERWISE INDICATED. MECHANICAL CONTRACTOR TO PROVIDE/INSTALL 24 VOLT TRANSFORMER AND POWER CONNECTION FROM THAT POINT TO BOX ACTUATOR.

PLUMBING FIXTURE SCHEDULE

ITEM #	DESCRIPTION	PIPE SIZES C.W.	PIPE SIZES H.W.	PIPE SIZES SAN.	PIPE SIZES VENT	TRAP TYPE	REMARKS
P-1	WATER CLOSET	½"	-	4"	2"	INTEGRAL	HANDICAPPED
P-1A	BEDPAN CLEANER	½"	-	-	-	-	-
P-1B	PUBLIC WATER CLOSET	½"	-	4"	2"	INTEGRAL	HANDICAPPED
P-1C	CLINIC SERVICE SINK	1"	-	4"	2"	"P"	-
P-2	WALL HUNG SINK	½"	½"	2"	2"	"P"	HANDICAPPED
P-2A	NURSE/CLEAN WORK SINK	½"	½"	2"	2"	"P"	ONLY THE NURSE WORK SINK TO BE PROVIDED WITH EYE WASH
P-2B	LOUNGE SINK	½"	½"	2"	2"	"P"	-
P-2C	SCRUB SINK	½"	½"	2"	2"	"P"	-
P-2D	SOILED WORK AREA	½"	½"	2"	2"	"P"	12" DEEP BOWL
P-2E	PATIENT RECOVERY COUNTERTOP HAND SINK	½"	½"	2"	2"	"P"	HANDICAPPED
P-2F	PATIENT RECOVERY WALL MTD. HAND SINK	½"	½"	2"	2"	"P"	HANDICAPPED
P-2G	PUBLIC HAND SINK	½"	½"	2"	2"	"P"	HANDICAPPED
P-3	JANITOR'S SINK	¾"	¾"	3"	2"	"P"	-
P-4	REFRIG. ICE MAKER	½"	-	-	-	-	-
P-5	SHOWER	½"	½"	2" SD	2"	"P"	HANDICAPPED
P-6	WATER FOUNTAIN	½"	-	2"	2"	"P"	HANDICAPPED

NOTES:
1) ALL EQUIPMENT SHALL BE AS SCHEDULED OR EQUAL.

PLUMBING CONTRACTOR SHALL INSTALL AND PIPE THERMOSTATIC MIXING VALVE PER THE MANUFACTURER'S INSTRUCTIONS.

TMV-1 THERMOSTATIC MIXING VALVE (POINT OF USE AT ALL SINKS EXCEPT P-2C)

SYMMONS (LAWLER OR LEONARD) "MAXLINE" MODEL #5-210-CKX-NI THERMOSTATIC MIXING VALVE WITH ⅜" INLET AND OUTLET WITH COMPRESSION FITTINGS, BRASS AND BRONZE BODY, STAINLESS STEEL FLOW, CONTROL COMPONENTS, VANDAL RESISTANT LOCKABLE HANDLE, SEPARATE CHECKS, WALL BRACKETS, ROUGH CHROME FINISH. ASSE 1070 CERTFIED. FIELD SET TEMPERATURE AT 110°F MAXIMUM.

TMV-2 THERMOSTATIC MIXING VALVE (EYEWASH)

LEONARD MODEL #TA-300 THERMOSTATIC MIXING VALVE WITH WITH TEMPERATURE LIMIT STOP, DIAL THERMOMETER ON THE OUTLET, MOUNTING BRACKETS, MIN. FLOW OF A ½ GPM @ 5 PSI SUPPLY PRESSURE, ½" INLETS, ANGLE CHECKSTOP ON INLETS, AND ROUGH BRONZE FINISH. ASSE 1071 CERTIFIED.

NOTE: FIELD SET TEMPERATURE ±75°F

ELECTRIC STEAM HUMIDIFIER SCHEDULE

ITEM#	AREA SERVED	STEAM (LB./HR)	K.W.	PIPE CONNECTIONS C.W.	PIPE CONNECTIONS DRIP PAN DRAIN	PIPE CONNECTIONS OVERFLOW DRAIN	ELECTRICAL DATA	WEIGHT (LBS.)	MODEL #	MANUFACTURER
H-1	RTU-1	10	3.3	½"	1"	1"	208v/3Φ	82	MDM-208-3-10	HERRMIDIFIER
H-2	RTU-2	10	3.3	½"	1"	1"	208v/3Φ	82	MDM-208-3-10	HERRMIDIFIER
H-3	RTU-3	10	3.3	½"	1"	1"	208v/3Φ	82	MDM-208-3-10	HERRMIDIFIER
H-4	RTU-5	10	3.3	½"	1"	1"	208v/3Φ	82	MDM-208-3-10	HERRMIDIFIER
H-5	RTU-4	10	3.3	½"	1"	1"	208v/3Φ	82	MDM-208-3-10	HERRMIDIFIER

NOTES:
1) CONTRACTOR WILL ONLY PURCHASE/OBTAIN THE HUMIDIFIER EQUIPMENT FROM THE FOLLOWING:

ENVIRONMENTAL PRODUCTS, INC. CONTACT: DAVID ALI
57 TIMONIUM ROAD, SUITE 303 Phone (410) 560-7950
TIMONIUM, MARYLAND 21093 Fax (410) 560-7953

2) PRIOR TO THE INSTALLATION OF THE HUMIDIFIER SYSTEM, A WATER TEST MUST BE CONDUCTED AND THE RESULTS SENT TO DAVE ALI, ABOVE, FOR MANUFACTURER ANALYSIS.

MISCELLANEOUS HEATING SCHEDULE

ITEM#	AREA SERVED	HEATER TYPE	C.F.M.	K.W.	BTU/HR	ELEC. DATA	STEPS OF CONTROL	CONTROL	MANUFACTURER/ MODEL #
EDH-1	WAITING RM ENTRANCE	ELECTRIC DUCT HEATER	420	3.0	10,239	208/1	1	WALL MTD. THERMOSTAT	INDEECO/SLIP-IN
EDH-2	LOUNGE	ELECTRIC DUCT HEATER	235	2.0	6,826	120/1	1	WALL MTD. THERMOSTAT	INDEECO/SLIP-IN
EDH-3	BACK ENTRANCE	ELECTRIC DUCT HEATER	130	1.0	3,413	120/1	1	WALL MTD. THERMOSTAT	INDEECO/SLIP-IN

NOTES:
1) ALL EQUIPMENT SHALL BE AS SCHEDULED OR EQUAL.
2) ELECTRIC DUCT HEATERS HEATING ONLY THERMOSTATS (PULSE-TYPE) BY INDEECO.
3) ELECTRIC DUCT HEATER TO BE QUA SLIP-IN HEATER (OPEN COIL) WITH CONTROL SCR CONTROLLER (OPTION K) AND AIR PROVING SWITCH.

MECHANICAL CONTRACTOR MUST BE CERTAIN THAT ALL NEW DOMESTIC WATER AND SPRINKLER PIPES INSTALLED THROUGHOUT WILL NOT FREEZE. THE CONTRACTOR MUST MAKE PROVISIONS TO PREVENT ANY PIPE FROM FREEZING THROUGHOUT OF OUR AREA OF WORK. IF NEEDED INSTALL MORE ELECTRIC HEATERS WHERE REQUIRED.

DUCTLESS SPLIT SYSTEM AIR HANDLING UNIT SCHEDULE

ITEM#	AREA SERVED	INDOOR FAN/DATA C.F.M.	O.A. C.F.M.	E.S.P.	H.P.	R.P.M.	COOLING COIL DATA TOTAL BTU/HR	COOLING COIL DATA SENSIBLE BTU/HR	INDOOR UNIT ELECTRICAL DATA	INDOOR UNIT WEIGHT (LBS.)	INDOOR UNIT MODEL #	OUTDOOR UNIT ELECTRICAL DATA	OUTDOOR UNIT MOCP	OUTDOOR UNIT WEIGHT (LBS.)	OUTDOOR UNIT MODEL #	MANUFACTURER
AHU-1/ ACCU-1	IT ROOM	300	N/A	.30"	-	LOW	12,000 / 4,500	10,000 / 3,000	230V/1Φ	50	MS8-C1-12P	208V/1Φ	15	90	MS8-CO-12P	LENNOX

NOTES:
1) REFRIGERANT PIPING TO BE SIZED, TRAPPED AND INSTALLED PER MANUFACTURER'S RECOMMEDATIONS.
2) AIR HANDLING UNIT TO BE PROVIDED WITH A SINGLE PROGRAMABLE THERMOSTAT, ALONG WITH FACTORY OPTION CONDENSATE PUMP. ROOM TEMPERATURE SETPOINTS: 75°F COOLNG/70°F HEATING.
3) AIR COOLED CONDENSING UNIT TO BE PROVIDED WITH SINGLE POINT POWER CONNECTION.
4) PRIOR TO INSTALL THE MECHANICAL CONTRACTOR MUST MAP OUT THE REFRIGERANT RUN AND THE OUTDOOR UNIT MOUNTING LOCATION ON THE ROOF WITH THE BUILDING ONWER. REFRIGERANT RUN MUST NOT EXCEED THE MANUFACTURER'S RECOMMENDATIONS.

ISSUED FOR ARIZONA
STATE ASC PLAN REVIEW

Registered Professional Engineer (Mechanical) CERTIFICATE NO. 31086 D.J. PENN ARIZONA U.S.A. Date Signed 1/19/17
Expires 3/31/18

635 Westport Parkway
Suite 300
Grapevine, Texas 76051
Phone: 817-410-2858
Fax: 817-251-8411
d p c e
don penn ■ consulting engineer

TENANT RENOVATIONS FOR:
LIFELINE
Access Center
325 S. Euclid Ave, Suite 109
Tucson, AZ 85719

Lifeline Vascular Access

InSync
ARCHITECTURAL DESIGNS, INC.
1213 Old Pylesville Road Whiteford, MD 21160
Office 410-452-8006 Fax 410-452-8046

0" 1" 2" 3"
1/8"=1'-0" 8' 16' 24'
1/4"=1'-0" 4' 8' 12'

SCHEDULES

REV#	DATE	DESCRIPTION
#1	6/29/16	Permit Review Comments
	1/6/17	Arizona State ASC Plan Review

DRAWING NO. M8
SHEET OF
DATE 4/13/16 DRAWN BY DLI
JOB NUMBER 11222 CHECKED BY DLI

MECHANICAL OUTLINE SPECIFICATION

1. Section 15010 – Basic Mechanical Requirements

A. The work of each of the mechanical sections includes furnishing and installing the material, equipment, and systems complete as specified and/or indicated on the drawings. The mechanical installations, when finished, shall be complete and coordinated, ready for satisfactory service of the build out.

B. All work under this contract shall be done in strict accordance with all applicable municipal, state, 2012 NFPA, BOCA, International codes and County/City Public Woek, that govern each particular trade.

C. The contractor shall make applications and pay all charges for all necessary permits, licenses and inspections as required under the above codes. Upon completion of the work, the customary certifications of approval shall be furnished.

D. No materials or equipment shall be used in the work until approved. Before submission of the shop drawings, and not more than fifteen (15) days after award of the contract, the contractor shall submit for approval a complete list of materials and equipment which he intends To furnish, giving manufacturer and catalog numbers.

E. The contractor shall examine all drawings and specifications and shall. Failure to comply with this requirement will not relieve the contractor of responsibility for complying with the intent of the contract documents.

F. The drawings indicate the general arrangement of the mechanical installations. Details of proposed departures due to actual field conditions or other causes shall be submitted for approval prior to installation. Reworking of completed items due to improper field coordination shall be at the contractor's expense.

G. Provide sufficient access and clearance for all items of equipment requiring servicing and maintenance, such as valves, drains, vents, etc...

H. The contractor shall prepare three (3) copies of a record and information booklet. The booklet shall be bound in a three-ring loose-leaf binder. Provide the following data in the booklet:

1) Catalog data on each piece of equipment furnished.
2) Approved shop drawings on each piece of equipment furnished.
3) Maintenance, operation and lubrication instruction on each piece of equipment furnished.
4) Simplified temperature control diagram.
5) Manufacturer's and contractor's guarantees.
6) Air balancing reports.
7) Commissioning reports.
8) Schedule/descroption of all service work/maintenance Inspections required by paragraphs P, Q and R of this section.

I. The entire new plumbing system shall be tested hydrostatically before insulation covering is applied and proved tight under the following gauge pressures:

Sanitary and vent piping. . . . . .As specified below
Domestic water . . . . .100 psig
Natural gas piping. . . . . Mercury gauge
Fire protection . . . . Per NFPA

J. All sanitary and vent piping shall be tested by the contractor. The entire new drainage system and venting system shall have all necessary openings plugged and filled with water to the level of ten (10) feet above the main or branch being tested. The system shall hold this water for thirty (30) minutes without showing a drop greater than four (4) inches.

Note: If any code or public utility requires testing which is different than the test listed above, the more stringent test shall be performed.

K. All parts of the heating, ventilating, air conditioning and exhaust Systems shall be adjusted, checked, balanced and tested by an A.A.B.C. certified testing & balancing contractor. The contractor shall put all systems and equipment into full operation, and shall test and balance all devices to within five (5) percent of capacities indicated on the drawings. Submit copies of the balancing reports as required by the contract. Permanently mark the position of each balancing damper and valve. Air balancing contractor to include in their report for the procedure room only the room and fresh air intake air changes the room's pressure (positive/negative).

L. Upon completion of the mechanical installations, the contractor shall provide a complete set of prints of the mechanical contract drawings which shall be legibly marked in red pencil to show all changes and departures of the installation as compared with the original design. They shall be suitable for use in preparation of record drawings.

M. All piping systems shall be identified with labels. Materials shall be as manufactured by seton name plate corporation.

N. All mechanical installations, including all materials and labor shall be guaranteed for a period of one (1) year from date of owner acceptance. The above shall not in any way void or abrogate equipment manufacturer's guarantee or warranty. Certificates of guarantee shall be delivered to the owner.

O. After roughing in the entire water main with future stubs the entire potable water systems shall be disinfected prior to use.The method to be followed shall be that prescribed by the local health authority/code requirements.

P. Contractor shall also provide one (1) year free service to keep the equipment in operating condition. This service shall be provided per the following schedule and rendered upon request when notified of any equipment malfunction.

Q. In addition to the first year warranty period, the contractor shall provide, at no additional cost to the owner, the following maintenance/inspections. A complete outline of the required maintenance and the proposed schedule shall be included in the "record and information booklet" detailed in section 15010-basic mechanical requirements, paragraph I, for review and acceptance by the owner/representative and engineer including the original system start-up commissioning).

The service work and inspections shall include, but not be limited to the following:

AAON UNITS

A. Monthly service as follows:

- –Inspect/Replace Filters
- –Inspect Fans
- –Inspect Evaporator Coils

B. Quarterly service as follows:

- –Clean Water Rinse Evaporator and Condenser Coils

C. Start of Heating Season as follows:

- –Check Furnace Combustion Ventiltaion and Flue Openings

CARRIER UNITS

A. Monthly service as follows:

- –Inspect/Replace Filters
- –Inspect Return Air Smoke Detector

B. Quarterly service as follows:

- –Outdoor Hood Inlet Filters Cleaned
- –Inspect Belts – Condition and Tension
- –Check Pulley Alignment
- –Check Fan Shaft Bearings, Locking Collar for Tightness and Wear
- –Check Condenser Coil Cleanliness
- –Check/Clean Condensate Line and Pan

C. Start of the Cooling Season as follows:

- –Inspect Evaporator and Clean Condenser Coils
- –Check for Free Movement of Condenser Fan(s)/Connections Tight
- –Check Refrigerant Charge Level
- –Check Evaporator Blower Motor Amperage
- –Inspect F/A and R/A Damper Hinges and Pins
- –Verify All Damper Linkages Move Freely, Lubricate as Necessary
- –Inspect/Tighten Electrical Connections

D. Start of Heating Season as follows:

- –Inspect/Tighten Electrical Connections
- –Check Fuses Ready
- –Manual–Reset Limit Switch Closed

Upon completion of each scheduled inspection, the contractor shall deliver to the building owner/owner's representative within forty- eight (48) hours of completion, two (2) copies of the completed inspection report for record purposes.

R. The mechanical or service contractor shall, at the ninth month, advise the owner of the termination date of the above service. This contractor shall also provide the owner with a detailed proposal, reflecting annual escalation, for the continuation of the service and inspections described above.

2. Section 15050 – Basic Mechanical Piping Material & Methods

A. Provide all labor and materials necessary to furnish and install all piping systems on this project, including sanitary, sanitary vent, domestic water, condensate drain and refrigerant piping systems.

B. Piping and valves shall be as follows:

1) Sanitary drains below grade

Pipe	Standard weight cast iron uncoated bell and spigot soil pipe.
Fittings	Standard weight cast iron bell and spigot uncoated soil pipe fittings.
Joints	Neoprene push–lock fittings.

2) Sanitary wastes and vent piping above floor inside building:

Pipe	Cast iron no–hub soil pipe
Fittings	Cast iron no–hub soil pipe fittings
Joints	No–hub stainless steel gasketed fittings

3) Domestic hot, cold and recirc. water piping inside building:

Pipe	All water lines above grade – hard copper type L. All domestic lines below grade – hard copper type K.
Fittings	Solder type wrought copper – lead free solder.
Ball valves	Two piece body, 150 lb. chrome plated full port bronze body and stem, reinforced the seat rings, Nibco S–585–70.
Unions	125 lb. Wrought copper, ground joint solder ends.

4) Natural gas piping:

Pipe	Above grade – schedule 40 black steel. Below grade – schedule 80 black steel mill wrapped.
Fittings	Long radius welding.
Flanges	Class 150 welding neck, nibco convoluted flange #271 or approved equal.
Gate valves	2" & smaller shall be bronze solid wedge, union bonnet, threaded ends, rising stem. Nibco #t–174–a. 2–1/2" & larger shall be iron body, bolted bonnet, os&y, bronze mounted. Nibco #f–667–0.

5) Fire protection: Piping and fittings as required by NFPA regulations and as hereinafter specified.

C. Copper pipe shall be revere, anaconda, or chase types "l" hard drawn, with approved solder fittings.

D. Cast iron piping shall be service weight drainage piping and shall conform to the requirements of the C.I.S.P.I. Each length of pipe and each fitting shall be clearly marked with the manufacturer's initials and pipe classifications.

E. Steel piping shall be similar and equal to national tube company, republic, or bethlehem black or zinc–coated (galvanized) steel as hereinbefore specified. Pipe shall be free from all defects which may affect the durability of the intended use. Each length of pipe shall be stamped with the manufacturer's name.

F. All hangers for copper piping shall be copper clad, split ring swivel type, having rods with machine threads and threaded copper clad ceiling flange. Cast iron and steel piping supports shall be similar without copper clad and prime paint finish.

G. Provide dielectric couplings where non–ferrous metal piping is joined to ferrous metal piping. The gasket material shall be capable of withstanding the temperatures and pressures within the piping system in which installed. Submit dielectric coupling and gasket material for approval.

3. Section 15250 – Mechanical Insulation

A. All supply, return and outside air ductwork throughout and all domestic water piping systems and horizontal condensate piping (in our space) shall be insulated with plenum rated fiberglass insulation. Insulate all refrigerant piping with 1–1/2" Armaflex throughout.

**Prior to purchase of Armaflex insulation the contractor must contact the manufacturer and verify 1–1/2" thick pipe insulation is suited for 115'f ambient tempertures. If not than provide the corrected thickness per the manf.

B. Pipe insulation shall be 2" premolded fiberglass insulation with an all service jacket, Owens Corning fiberglass SSL–II. Fittings shall be insulated and covered with pvc covers.

C. Ductwork shall be insulated with 3" flexible duct wrap or if determined to be less by the contractor than provide data to support using less duct wrap during the submittal phase, Owens Corning fiberglass type 75 with foil faced vapor barrier. Insulation shall be neatly installed. Any insulation damaged during construction shall be properly fixed.

**Install all insulation per manufacturer's recommendations

D. All supply and return air ductwork located outside to be insulated with 2" rigid board insulation (3.0 pcf) and sealed with 100% mastic sealer and uv protection.

**Prior to purchase of rigid board insulation the contractor must contact the manufacturer and verify 2" thick board insulation is suited for 115'f ambient tempertures. If not than provide the corrected thickness per the manf.

4. Section 15300 – Fire Protection

A. All work, materials, equipment, and accessories shall comply with the standards of the National Fire Protection Association and all state and local regulations.

B. The sprinkler contractor shall extend the wet pipe sprinkler system to properly cover/protect the new tenant layout. Final density flow per square foot shall be determined by fire marshall.

C. The installation shall include, but are not limited to valves, flow switches, sprinkler heads and escutcheons, piping, fittings, hangers and signs and other identification markings, as required.

D. The sprinkler contractor shall carefully examine all documents during the bidding period. He shall familiarize himself with project conditions such as building construction and pipe and ductwork locations and elevations.

E. Sprinkler heads shall be installed to properly cover and protect the new tenant layout. Sprinkler heads shall be installed to protect the entire structure. Any sprinkler heads installed in finished ceilings shall be brushed chrome semi recessed type.

F. The contractor shall arrange for approval of the sprinkler systems, and conduct tests in accordance with NFPA 13.

G. The sprinkler contractor shall provide a detailed shop drawing showing piping layout, head locations, elevations and coordination with all building structure, electrical and plumbing trades. The contractor shall submit detailed sprinkler shop drawings with actual heads for architect approval prior to any fabrication.

H. The sprinkler contractor must submit one sepia of sprinkler shop drawings and hydraulic calculations to county fire department/ Fire Marshall prior to any fabrication or construction.

Provide sprinkler coverage per NFPA within the Oxygen Room as required by NFPA. This can be accomoplished using dry pendent or dry side wall sprinklers to prevent freezing of pipes. Instalation method to be per fire protection contractor and NFPA.

5. Section 15400 – Plumbing

A. The work covered by this section of the specifications consists of furnishing all labor, equipment and materials in connection with the rough–in, final setting and connections to all plumbing fixtures. The contractor shall carefully review the conditions at the site and all of the contract drawings to determine the extent of the plumbing work required.

B. All plumbing fixtures shall be complete in every detail with all trimmings and connections. All fixtures shall be designed to prevent the backflow of polluted water or waste into the water supply system. Fixtures P–1, P–1A AND P–2 shall be American Standard or approved equal as follows:

P–1 Water closet (handicapped): #2377.100 Cadet, 16–1/2" high elongated toilet, water saver 1.6 gallon flush with vitreous china construction, pressure–assisted siphon jet flush action, close–coupled tank, bolt caps, Church open front white seat with cover, rigid supply with angle stop valve. Provide a toilet with alternate configeration #3109.203 to accommodate P–1A in Patient Toilet room only.

less cover

P–1A Bedpan Cleaning Assembly: #7880.191 assembly which includes vacuum breaker, nozzle with hook and loose key supply.

P–1B Water closet (handicapped): Kohler #K–3503–47 Devonshire, 16–1/2" high elongated toilet, water saver 1.6 gallon flush with vitreous china construction, class five flushing system, close–coupled tank, bolt caps, Church open front white seat with cover, rigid supply with angle stop valve.

P–1C Clinic Service Sink: American Standard model 9504 010, 18" high, 4.5 gallon flush with vitreous china construction, siphon jet action integral flushing rim, provide a Sloan Royal, model 117–0 flush valve with a 2" offset flush connection. Also install a wall mounted service faucet as manufactured by American Standard #8345.115 with lower brace, exposed yoke, stops, cast brass spout, 15" reach from wall to spout outlet, 3/4" hose thread on spout, integral vacuum breaker, adjustable union couplings, stop shanks and 30" flexible hose. Prior to install of the service faucet coordinate with the construction manager the exact mounting location in the field.

P–2 Wall Hung Sink (handicapped): #0355.012 Lucerne, vitreous china construction, front overflow, faucet ledge. Lavatory to be fitted with Sloan #SF–2350 faucet, sensor activated with battery power, 4" on ctr., 0.5 gpm laminar flow (maximum 0.25 gallons per metering cycle), complete with grid drain, tailpiece, cast brass "p" trap, tubing to wall escutcheon, key operated supply valves with rigid supplies and chair carrier. All exposed waste piping and hot and cold water piping shall be insulated with truebro handi lav–guard model102 insulation kit with white finish.

P–2A Nurse and Clean Work Sink: #LR–1722 by Elkay, 18 gauge–type 302–self rim bowl. Faucet shall be #27T2944 by Delta, 10–1/2" high gooseneck spout with 6" wrist blade handles and a 1.5 gpm laminar flow with aerator. Sink to be complete with grid drain, tailpiece, cast brass "p" trap, wall escutcheon and supply valves with chrome supplies. Provide deck mounted eye wash by Guardian #G5022 with duct covers, internal flow control and filter to remove impurities (eyewash for the Nurse Work sink only–refer to note 11 on sheet M4 for water temperature control).

P–2B Lounge Sink: #GECR3321 by Elkay, 20 gauge–type 302–self rim bowl double bowl sink @ 14"x15–3/4"x5–5/8" each, overall 33"x22–1/4", 4–hole for, faucet S–23–2W by Symmons with single lever, swinging hi–spout and retractable hose/spray and water flow restrictor (2.2 gpm max.). Sink to be complete with grid drain, tailpiece, cast brass "p" trap, tubing to wall escutcheon, key operated supply valves with rigid supplies. Provide garbage disposer as manufactured by In–Sink–Erator Badger 5, 1/2 hp, 120volt ,1 phase.

P–2C Scrub Sink: #Z5460 by Zurn, (No substitutes), wall mounted vitreous china surgeon sink, low front rim with large deep basin, single faucet hole, complete with concealed floor mounted arm carrier/support brackets. Faucet shall be polished chrome plated sensor activated, solid brass solenoid with built–in filter solenoid valve with servicable "Y" strainer filter and 2.2 gpm laminar flow. Metal jacketed wire protection for sensor and solenoid leads. Gooseneck faucet shall have a surgical bend spout, 8" trim plate and plug–in transformer. Faucet WILL be Sloan, model # ETF–700–S–8P. (No substitutions). Sink to be complete flat metal grid drain with 1–1/2"x4"tailpiece. Also include P trap, tubing to wall escutcheon and supply valves with chrome supplies.

P–2D Solied Work Sink: #DLR–2222–12 by Elkay, 19"x16"x12" DEEP BOWL, (3–hole), 18 gauge–type 302–self rim bowl. Faucet shall be #27T2944 by Delta, 10–1/2" high gooseneck spout with 6" wrist blade handles and 1.5 gpm laminar flow with aerator. Sink to be complete with grid drain, tailpiece, cast brass "p" trap,tubing to wall escutcheon, key operated supply valves with rigid supplies.

P–2E Patient Recovery Sink: #LR–1722 by Elkay, 18 gauge–type 302–self rim bowl. Faucet shall be #27T2944 by Delta, 10–1/2" high gooseneck spout with 6" wrist blade handles and a 1.5 gpm laminar flow. Sink to be complete with grid drain, tailpiece, cast brass "p" trap, wall escutcheon and supply valves with chrome supplies.

P–2F Patient Recovery Hand Sink: Briggs Milton #6620, vitreous china 20"x18" wall hung lavatory, front overflow, 4" o.c., Faucet Delta 27C4835. Gooseneck faucet with deck plate, 6" wrist blade handles; 1.5 gpm laminar flow, 4" cover plate, complete with grid drain, tailpiece, cast brass "p" trap, ubing to wall escutcheon, key operated supply valves with rigid supplies and chair carrier.All exposed waste piping and hot and cold water piping shall be insulated with truebro handi lav–guard model 102 insulation kit with white finish.

P–2G Under–Mount Sink (handicapped): Kohler #K–2350–47 Devonshire, vitreous china construction, front overflow. Lavatory to be fitted with Sloan #SF–2350 faucet, sensor activated battery power, 4" on ctr., 0.5 gpm laminar flow, (maximum 0.25 gallons per metering cycle) complete with grid drain, tailpiece, cast brass "p" trap, tubing to wall escutcheon, key operated supply valves with rigid supplies and chair carrier. All exposed waste piping and hot and cold water piping shall be insulated with truebro handi lav–guard model 102 insulation kit with white finish.

P–3 Janitor's Sink: #MSB–2424 by Fiat, 24" X 24" X 10" deep molded stone mop service basin color white. The factory installed drain body shall be stainless steel and designed to provide for a lead caulk or QDC–3 joint to a 3" drain pipe. Service faucet #830–AA Fiat with top brace, stops, 9" spout, 3/4" hose thread on spout, integral vacuum breaker, adjustable union couplings, stop shanks and 30" flexible hose.

P–4 Refrigeration Ice Maker: Contractor shall provide wall mounted recessed box with shut off valve for connection to refrigerator ice maker by others. Extend 1/4" water line to unit with in–line cartridge filter. Verify exact line size. Box shall be Oatey Model S2K with chrome ball valve.

P–5 Shower Unit (handicapped): Crane model 3636.01F R with 36" x 36" stall, one–piece fiberglass construction. Unit shall come with factory option, cast brass drain with chrome plated strainer, acrylic antibacterial protection, white finish, shower curtain, solid padded vinyl seat, slide guide (for hand held shower attachment), swivel fitting, 69" flexible stainless steel hose, and in–line breaker and pressure balanced single lever mixing valve with check stops.

P–6 Drinking Fountain (handicapped): Elkay, bi–level ADA water water fountain, barrier–free, wall–hung unit with EZH20 bottle filling station. Unit shall be constructed of non corrosive series stainless steel with brush satin finish and pushbutton activation on the front of each fountain. Drinking fountain must be mounted per ADA requirements.

Floor Drain Zurn Z–415–B. Round cast iron body with flashing collar, 5" round nickel bronze adjustable strainer head with secured square hole grate, bottom waste outlet and trap primer connection. Automatic trap primer manufactured by P.P.P or Proset Trap Gurad drain. Proset only if code allows.

C. Sanitary vents thru roof shall be flashed with seamless lead flashing assemblies. Flashing shall have a conical steel reinforced boot and shall be complete with a top cast iron counterflashing.

D. Potable water systems shall be disinfected prior to use. The method to be followed shall be that prescribed by the health authority and code requirements.

6. Section 15500 – Heating, Ventilating & Air Conditioning (HVAC)

A. The work to be performed shall include all labor, materials and equipment necessary to furnish and install complete, all hvac mechanical equipment as shown on drawings and/or hereinafter specified. It is the intent that the systems be installed complete with all items necessary to provide satisfactory service.

B. All heating, ventilating and air conditioning equipment which contains compressors shall be provided with extended warranties (minimum four (4) years) for the compressors.

C. New HVAC heating and cooling unit:

** Carrier units scheduled on sheet M8 will be Carrier unit. No substitutes. Refer to sheet M8 rooftop unit schedule for factory requirements.

** Aaon units scheduled on sheet M8 will be Aaon unit. No substitutes. Refer to sheet M8 rooftop unit schedule for factory requirements.

7. Section 15880 – Air distribution

A. Furnish all labor and materials necessary to complete the sheet metal work associated with the heating, ventilating, air conditioning and exhaust systems, and other miscellaneous items shown and required.

B. All ductwork shall be constructed and installed in accordance with the sheet metal and air conditioning contractors national association (smacna) standards, ashrae standards and boca standards.

C. Flexible ductwork shall be Hart & Cooley type F218 or approved equal. Flexible duct shall comply with NFPA bulletin 90a and shall be U.L. listed as class 1 air duct and connector, standard 181.

D. Support horizontal ducts with hangers spaced not more than six (6) feet apart. Use straphangers for ducts up to thirty (30) inches wide, angle hangers or rods for ducts over thirty (30) inches wide. Straphangers to be one (1) inch wide, 20 gauge minimum; fasten to sides and bottom of duct with sheet metal screws.

E. Ducts shall be straight and smooth on the inside, with joints neatly finished. Ducts shall be suspended from the construction and shall be free from vibration. Curved elbows shall have a center radius equal to one and one–half (1–1/2) times the width of the duct. All square turns shall be vaned. Vanes consisting of curved metal blades shall permit the air to make abrupt turns without turbulence.

F. All joints in the heating, ventilating, air conditioning and exhaust system ductwork shall be sealed.

Sealant shall be as manufactured by United Inc. or approved equal, sealant shall be smacna and ul approved, with a flame spread of 10 and a smoke developed of 0, non–toxic and non–flammable. Sealant shall be approved for operating temperatures from 0 degrees f. to 200 degrees f.

Sealant system shall be installed in strict accordance with the manufacturer's recommendations and when applied shall provide a permanent seal without any deterioration.

G. Square ductwork air devices:

1) Supply air diffusers shall have all steel construction, Titus model TMS with vaned face and finished with #26 off–white enamel. Air device to come with factory optional molded insulation blanket.
2) Return air grille shall have all steel construction, Titus model 25R with louvered face and finished with #26 off–white enamel.
3) Exhaust air grille shall have all steel construction, Titus model 25R with louvered face and finished with #26 off–white enamel.
4) Supply air registers shall have all steel construction with 3/4" spaced, double deflection louvers, opposed blade damper and finished with #26 off–white enamel. Titus model 300F.
5) Supply air devices for the Procedure Room shall be laminar flow diffuser panels (LFD) with airflow dampers. Air device shall be of aluminum construction as manufactured by Price to make up a complete isolation system through controlled air patterns for the Procedure Rooms. Supply air device to come with factory optional insulation blanket on the back side of the air device.
6) Return air grille shall be of stainless steel construction, Price model 700H with louvered face. For Procedure Room only.

** The supply and exhaust air devices to be located in the Team Mate Toilet Room is to be of aluminum construction.

8. Section 15950 – Controls

A. The contractor under this heading shall furnish and install all wiring necessary for a complete electric system of automatic temperature control. The system shall include all necessary thermostats, relays, switches, etc. required for successful operation. electrical work in connection with the temperature control system shall be performed by the control contractor.

B. New rooftop unit hvac unit shall be controlled by a single wall mounted heating/cooling programmable thermostat, as needed, with seven (7) day twenty–four (24) hour program clock control as manufactured by Carrier or equal. Provide a new thermostat if existing thermostat is not as specified here.

New air handling hvac unit (Aaon) wall mounted heating/cooling thermostat. Refer to sheet M8 for more information on Aaon unit controls.

* Controls contractor to provide/install a differential pressure sensor in the ductwork before and after the filter rack housing the MERV (pre–filter) and the HEPA and interlock with the Magnehilc gauge. Mount above ceiling in plain view for the maintenance contractor to see.

D. The automatic temperature control contractor shall be responsible for the commissioning of the project to assure a fully functional, fine–tuned hvac system upon occupancy.

C. The commissioning of the project shall be performed in accordance with american society of heating, refrigerating and air conditioning engineers, inc. (ASHRAE) pamphlet 1–1989 guideline for commissioning of hvac systems.

Commissioning is defined as verification of the proper operation of all equipment, alarms, safeties and control and energy management systems serving mechanical systems installed or modified on this project as defined within the specifications and indicated on the contract drawings.

Proper operation is defined as the activation of all controls, field or factory installed, to assure the correct sequencing of equipment and systems, including activation of all operating and safety controls, as hereinbefore described.

The automatic temperature control contractor shall report all system deficiencies to the mechanical contractor. The mechanical contractor shall instruct the proper trade to correct any deficiencies reported by the automatic temperature control contractor so that the project commissioning can be completed.

Prior to the commencement of any commisioning work, the automatic temperature control contractor shall provide the engineer with a commissioning report format for review and approval. The report format shall be delivered to the engineer not more than thirty (30) days after award of the atc contract or not less than sixty (60) days prior to start of atc work, whichever is earlier.

Commissioning report format shall include a list of all items to be verified, with the initials of the mechanic who verified the particular item/control and the date on which each item/control operation was verified.

Three (3) commissioning reports are req'd. The first report shall be completed during the initial commissioning of the project prior to occupancy. The second and third reports shall be completed no more than two (2) months (1 report/month) after occupancy of the building. The final report shall also contain the signature of the owner or owner's representative for each item verified.

The controls contractor shall provide the LifeLine management team an instructional "hands on" demostration of the HVAC automation system.

E. Refer to drawing, sheet M8, sequence of operations.

F. All control wiring installed above the ceiling is to be approved for ceiling/plenum installation.

0" 1" 2" 3"
1/8"=1'–0" 8' 16' 24'
1/4"=1'–0" 4' 8' 12'

ISSUED FOR ARIZONA STATE ASC PLAN REVIEW

Registered Professional Engineer (Mechanical) CERTIFICATE NO. 31088 D.J. PENN ARIZONA U.S.A. Date Signed 1/19/17
Expires 3/31/18

dpce don penn ▪ consulting engineer
635 Westport Parkway
Suite 300
Grapevine, Texas 76051
Phone: 817-410-2858
Fax: 817-251-8411

TENANT RENOVATIONS FOR:
LIFELINE
Access Center
325 S. Euclid Ave, Suite 109
Tucson, AZ 85719

Lifeline Vascular Access

InSync
ARCHITECTURAL DESIGNS, INC.
1213 Old Pylesville Road Whiteford, MD 21160
Office 410-452-8006 Fax 410-452-8046

SPECIFICATIONS

REVISIONS		
REV#	DATE	DESCRIPTION
#1	6/29/16	Permit Review Comments
	1/6/17	Arizona State ASC Plan Review

DRAWING NO. M9
SHEET OF
DATE 4/13/16 DRAWN BY DLI
JOB NUMBER 11222 CHECKED BY DLI

COMcheck Software Version 3.9.2
Mechanical Compliance Certificate

2012 IECC

Section 1: Project Information

Project Type: **Addition**
Project Title : LifeLine - Arizona

Construction Site:	Owner/Agent:	Designer/Contractor:
325 S. Euclid Ave, Tucson, AZ 85719	LifeLine	Don Penn Consulting Engineer 635 Westport Parway Grapevine, TX 76051 817-41-2858

Section 2: General Information

Building Location (for weather data): **Tucson, Arizona**
Climate Zone: **2b**

Section 3: Mechanical Systems List

Quantity **System Type & Description**

1 HVAC System RTU-1 (Single Zone) : Rooftop Packaged Heat Pump
Heating Mode: Capacity = 61900 kBtu/h,
Proposed Efficiency = 3.38 COPRequired Efficiency = 3.20 COP
Cooling Mode: Capacity = 41830 kBtu/h, , No Economizer , Economizer exception: High Efficiency Equipment
Proposed Efficiency = 13.65 EERRequired Efficiency = 10.45 EER
Fan System: None

1 HVAC System RTU-2 (Single Zone) : Rooftop Packaged Heat Pump
Heating Mode: Capacity = 61900 kBtu/h,
Proposed Efficiency = 3.38 COPRequired Efficiency = 3.20 COP
Cooling Mode: Capacity = 41830 kBtu/h, , No Economizer , Economizer exception: High Efficiency Equipment
Proposed Efficiency = 13.65 EERRequired Efficiency = 10.45 EER
Fan System: None

1 HVAC System RTU-3 (Single Zone) : Rooftop Packaged Heat Pump
Heating Mode: Capacity = 45500 kBtu/h,
Proposed Efficiency = 3.50 COPRequired Efficiency = 3.20 COP
Cooling Mode: Capacity = 40600 kBtu/h, , Air Economizer
Proposed Efficiency = 11.20 EERRequired Efficiency = 9.50 EER
Fan System: None

1 HVAC System RTU-4 (Single Zone) : Rooftop Packaged Heat Pump
Heating Mode: Capacity = 45500 kBtu/h,
Proposed Efficiency = 3.50 COPRequired Efficiency = 3.20 COP
Cooling Mode: Capacity = 42000 kBtu/h, , Air Economizer
Proposed Efficiency = 11.20 EERRequired Efficiency = 9.50 EER
Fan System: None

1 HVAC System RTU-5 (Single Zone) : Rooftop Packaged Heat Pump
Heating Mode: Capacity = 45500 kBtu/h,
Proposed Efficiency = 3.50 COPRequired Efficiency = 3.20 COP
Cooling Mode: Capacity = 42000 kBtu/h, , No Economizer , Economizer exception: High Efficiency Equipment
Proposed Efficiency = 11.20 EERRequired Efficiency = 10.45 EER
Fan System: None

1 HVAC System RTU-6 (Single Zone) : Rooftop Packaged Heat Pump
Heating Mode: Capacity = 35600 kBtu/h,
Proposed Efficiency = 3.30 COPRequired Efficiency = 3.20 COP

Cooling Mode: Capacity = 32000 kBtu/h, , No Economizer , Economizer exception: High Efficiency Equipment
Proposed Efficiency = 11.30 EERRequired Efficiency = 10.45 EER
Fan System: None

1 HVAC System RTU-7 (Single Zone) : Rooftop Packaged Heat Pump
Heating Mode: Capacity = 45500 kBtu/h,
Proposed Efficiency = 3.50 COPRequired Efficiency = 3.20 COP
Cooling Mode: Capacity = 38000 kBtu/h, , No Economizer , Economizer exception: High Efficiency Equipment
Proposed Efficiency = 11.30 EERRequired Efficiency = 10.45 EER
Fan System: None

1 HVAC System EDH-1 (Single Zone) :
Heating: 1 each - Unit Heater, Electric, Capacity = 10239 kBtu/h
Fan System: None

1 HVAC System EDH-2 (Single Zone) :
Heating: 1 each - Unit Heater, Electric, Capacity = 15359 kBtu/h
Fan System: None

1 HVAC System EDH-3 (Single Zone) :
Heating: 1 each - Unit Heater, Electric, Capacity = 6826 kBtu/h
Fan System: None

1 HVAC System EDH-4 (Single Zone) :
Heating: 1 each - Unit Heater, Electric, Capacity = 3413 kBtu/h
Fan System: None

1 HVAC System HUH-1 (Single Zone) :
Heating: 1 each - Unit Heater, Electric, Capacity = 10239 kBtu/h
Fan System: None

Section 4: Requirements Checklist

Requirements Specific To: HVAC System RTU-1 :

☐ 1. Equipment minimum efficiency: Heat Pump: 3.20 COP 10.45 EER
☐ 2. Integrated economizer is required for this location and system..

Requirements Specific To: HVAC System RTU-2 :

☐ 1. Equipment minimum efficiency: Heat Pump: 3.20 COP 10.45 EER
☐ 2. Integrated economizer is required for this location and system..

Requirements Specific To: HVAC System RTU-3 :

☐ 1. Equipment minimum efficiency: Heat Pump: 3.20 COP 9.50 EER (9.6 IEER)
☐ 2. Integrated air economizer is required for individual cooling systems and allows modulation of outdoor air and return air dampers to provide up to 100% of the design supply air quantity as outdoor air for cooling. All air economizers shall be capable of automatically reducing outdoor air intake to the design minimum outdoor air quantity when outdoor air intake will no longer reduce cooling energy usage.
☐ 3. Air economizer dampers can be sequenced with the cooling equipment and not controlled exclusively by mixed air temperature.
Exception(s):
☐ System controlled from space temperature (such as single-zone systems).
☐ 4. Cooling system provides a means to relieve excess outdoor air during economizer operation.

Requirements Specific To: HVAC System RTU-4 :

☐ 1. Equipment minimum efficiency: Heat Pump: 3.20 COP 9.50 EER (9.6 IEER)
☐ 2. Integrated air economizer is required for individual cooling systems and allows modulation of outdoor air and return air dampers to provide up to 100% of the design supply air quantity as outdoor air for cooling. All air economizers shall be capable of automatically reducing outdoor air intake to the design minimum outdoor air quantity when outdoor air intake will no longer reduce cooling energy usage.
☐ 3. Air economizer dampers can be sequenced with the cooling equipment and not controlled exclusively by mixed air temperature.
Exception(s):
☐ System controlled from space temperature (such as single-zone systems).
☐ 4. Cooling system provides a means to relieve excess outdoor air during economizer operation.

Requirements Specific To: HVAC System RTU-5 :

☐ 1. Equipment minimum efficiency: Heat Pump: 3.20 COP 10.45 EER
☐ 2. Integrated economizer is required for this location and system.

Requirements Specific To: HVAC System RTU-6 :

☐ 1. Equipment minimum efficiency: Heat Pump: 3.20 COP 10.45 EER
☐ 2. Integrated economizer is required for this location and system..

Requirements Specific To: HVAC System RTU-7 :

☐ 1. Equipment minimum efficiency: Heat Pump: 3.20 COP 10.45 EER
☐ 2. Integrated economizer is required for this location and system..

Requirements Specific To: HVAC System EDH-1 :

None

Requirements Specific To: HVAC System EDH-2 :

None

Requirements Specific To: HVAC System EDH-3 :

None

Requirements Specific To: HVAC System EDH-4 :

None

Requirements Specific To: HVAC System HUH-1 :

None

Generic Requirements: Must be met by all systems to which the requirement is applicable:

☐ 1. Plant equipment and system capacity no greater than needed to meet loads
Exception(s):
☐ Standby equipment automatically off when primary system is operating
☐ Multiple units controlled to sequence operation as a function of load
☐ 2. Minimum one temperature control device per system
☐ 3. Minimum one humidity control device per installed humidification/dehumidification system
☐ 4. Load calculations per ASHRAE/ACCA Standard 183.
☐ 5. Automatic Controls: Setback to 55°F (heat) and 85°F (cool); 7-day clock, 2-hour occupant override, 10-hour backup
Exception(s):
☐ Continuously operating zones
☐ 2 kW demand or less, submit calculations
☐ 6. Automatic start controls that can automatically adjust the daily start time of the HVAC system are provided for each system.
☐ 7. Outside-air source for ventilation; system capable of reducing OSA to required minimum
☐ 8. R-6 supply and return air duct insulation in unconditioned spaces
R-8 supply and return air duct insulation outside the building
R-8 insulation between ducts and the building exterior when ducts are part of a building assembly
Exception(s):
☐ Ducts located within equipment
☐ Ducts with interior and exterior temperature difference not exceeding 15°F.
☐ 9. Ducts sealed - longitudinal seams on rigid ducts; transverse seams on all ducts; UL 181A or 181B tapes and mastics
☐ 10. Pipe serving heating and/or cooling systems is insulated per Section C403.2.8. General applicable insulation requirements are:
Fluid Temp Range (°F)
> 350 : < 1.0" pipe = 4.5" insulation, otherwise 5.0" insulation
251-350 : < 1.0" pipe = 3.0" insulation, < 1.5" pipe = 4.0" insulation, otherwise 4.5" insulation
201-250 : < 4.0" pipe = 2.5" insulation, otherwise 3.0" insulation
141-200 : < 1.5" pipe = 1.5" insulation, otherwise 2.0" insulation
105-140 : < 1.5" pipe = 1.0" insulation, otherwise 1.5" insulation
40-60 : < 1.5" pipe = 0.5" insulation, otherwise 1.0" insulation
< 40 : < 1.0" pipe = 0.5" insulation, < 8.0" pipe = 1.0" insulation, otherwise 1.5" insulation
Exception(s):
☐ Piping within HVAC equipment.
☐ Fluid temperatures between 60 and 105°F.
☐ Fluid not heated or cooled with renewable energy.
☐ Piping within room fan-coil (with AHRI440 rating) and unit ventilators (with AHRI840 rating).
☐ Strainers and values associated with piping <= 1.0".
☐ Direct buried piping with fluid temperatures <= 60°F.
☐ 11. Operation and maintenance manual provided to building owner
☐ 12. Demand control ventilation (DCV) present for high design occupancy areas (>25 person/1000 ft2 in spaces >500 ft2) and served by systems with any one of 1) an air-side economizer, 2) automatic modulating control of the outdoor air damper, or 3) a design outdoor airflow greater than 3000 cfm.

Exception(s):
☐ Systems with heat recovery.
☐ Multiple-zone systems without DDC of individual zones communicating with a central control panel.
☐ Systems with a design outdoor airflow less than 1200 cfm.
☐ Spaces where the supply airflow rate minus any makeup or outgoing transfer air requirement is less than 1200 cfm.
☐ Ventilation for process loads only.
☐ 13. Total cooling capacity without economizers must be less than 16520 kBtu/h. This project lists 195680 kBtu/h capacity without economizers.
☐ 14. Motorized, automatic shutoff dampers required on exhaust and outdoor air supply openings
Exception(s):
☐ Gravity dampers acceptable in buildings <3 stories
☐ 15. Automatic controls for freeze protection systems present
☐ 16. Each fan system has an energy recovery system when one of the following conditions are met:
50% >= POA < 60% AND DAF >= 26,000 cfm
60% >= POA < 70% AND DAF >= 12,000 cfm
70% >= POA AND DAF >= 5,000 cfm
where POA = Percent outdoor air at full design airflow rate and DAF = Design supply fan airflow rate
Exception(s):
☐ Laboratory fume hood systems with a total exhaust rate <= 5000 cfm.
☐ Systems serving spaces that are not cooled and heated to <60°F.
☐ Systems with more than 60% of the outdoor heating energy is provided from site-recovered or site solar energy.
☐ Systems exhausting toxic, flammable, paint, or corrosive fumes or dust.
☐ Systems requiring dehumidification with cooling coil energy recovery in series with the cooling coil.
☐ Systems expected to operate < 20 hrs per week when outdoor air percentage >= 30%.
☐ Where the largest exhaust source is less than 75% of the design outdoor airflow.
☐ 17. Mechanical systems shall meet commissioning and completion requirements in Section C408.2.

Section 5: Compliance Statement

Compliance Statement: The proposed mechanical design represented in this document is consistent with the building plans, specifications and other calculations submitted with this permit application. The proposed mechanical systems have been designed to meet the 2012 IECC, Chapter 8, requirements in COM*check* Version 3.9.2 and to comply with the mandatory requirements in the Requirements Checklist.

Don Penn, P.E. _____ 11/19/17
Name - Title Signature Date

Section 6: Post Construction Compliance Statement

☐ HVAC record drawings of the actual installation, system capacities, calibration information, and performance data for each equipment provided to the owner.
☐ HVAC O&M documents for all mechanical equipment and system provided to the owner by the mechanical contractor.
☐ Written HVAC balancing and operations report provided to the owner.

The above post construction requirements have been completed.

Principal Mechanical Designer-Name _____ Signature _____ Date _____

ISSUED FOR ARIZONA
STATE ASC PLAN REVIEW

dpce
635 Westport Parkway
Suite 300
Grapevine, Texas 76051
Phone: 817-416-1500
Fax: 817-251-9411
don penn ■ consulting engineer

TENANT RENOVATIONS FOR:
LIFELINE
Access Center
325 S. Euclid Ave, Suite 109
Tucson, AZ 85719

Lifeline Vascular Access

InSync
ARCHITECTURAL DESIGNS, INC.
1213 Old Pylesville Road Whiteford, MD 21160
Office 410-452-8006 Fax 410-452-8046

0" 1" 2" 3"
1/8"=1'-0" 8' 16' 24'
1/4"=1'-0" 4' 8' 12'

ComCheck

REVISIONS		
REV#	DATE	DESCRIPTION
#1	6/29/16	Permit Review Comments
	1/6/17	Arizona State ASC Plan Review

DRAWING NO. M10
SHEET OF
DATE 4/13/16 DRAWN BY DLJ
JOB NUMBER 11222 CHECKED BY DLJ

1 2 3 4 5 6 7 8 9
A B C D E F G H

GENERAL ELECTRICAL NOTES:

1. ALL WORK SHALL BE IN ACCORDANCE WITH THE LATEST ADOPTED EDITION OF NATIONAL ELECTRICAL CODE AND ALL LOCAL COUNTY CODES AND AMENDMENTS. WIRING METHODS SHALL BE IN ACCORDANCE WITH THE N.E.C., LOCAL CODES AND STANDARDS. THE CONTRACTOR SHALL OBTAIN AND PAY ALL FEES AND PERMITS REQUIRED FOR THE CONSTRUCTION OF THE PROJECT.
2. THE ELECTRICAL CONTRACTOR SHALL BE RESPONSIBLE FOR COORDINATING THE INSTALLATION OF THE ELECTRICAL SERVICE WITH THE LOCAL POWER COMPANY; NEW AND/OR UPGRADED.
3. DRAWINGS ARE DIAGRAMMATIC AND INDICATE GENERAL ARRANGEMENT OF SYSTEMS AND WORK. SCALE DIMENSIONS SHALL NOT BE USED. IN AS MUCH AS THE DRAWINGS ARE GENERALLY DIAGRAMMATIC AND DUE TO THE SMALL SCALE OF THE DRAWINGS, IT IS NOT POSSIBLE TO INDICATE ALL OFFSETS, FITTINGS AND ACCESSORIES, AS MAY BE REQUIRED. THE CONTRACTOR SHALL CAREFULLY INVESTIGATE THE SITE, STRUCTURAL, AND FINISH CONDITIONS AFFECTING HIS WORK AND SHALL ARRANGE SUCH WORK ACCORDINGLY, FURNISHING SUCH FITTING AND ACCESSORIES AS MAY BE REQUIRED TO MEET SUCH CONDITIONS, AT NO ADDITIONAL COST TO THE OWNER. THE RIGHT TO MAKE ANY REASONABLE CHANGE IN LOCATION OF APPARATUS, EQUIPMENT, OUTLETS OR ROUTING OF CONDUIT AND WIRING, UP TO THE TIME OF ROUGHING-IN IS RESERVED BY THE ENGINEER WITHOUT INVOLVING ANY ADDITIONAL EXPENSE TO THE OWNER.
4. UNLESS OTHERWISE NOTED, CONNECT EXIT LIGHTS, EMERGENCY BATTERY UNITS AND NIGHT LIGHTS (NL) TO UNSWITCHED PORTION OF NORMAL LIGHTING CIRCUIT SERVING RESPECTIVE AREA.
5. ALL WIRING SHALL BE COPPER, #12 AWG MINIMUM, TYPE THW OR THHN INSULATION, INSTALLED IN CONDUIT (1/2" MINIMUM). NO ROMEX OR BX CABLE PERMITTED. MC CABLE MAY BE USED, WHERE PERMITTED BY CODE, FOR WORK ABOVE CEILINGS AND CONCEALED IN WALLS.
6. THE CORRECT NUMBER OF WIRES MAY NOT BE INDICATED FOR ALL CIRCUITS. THE ELECTRICAL CONTRACTOR SHALL PROVIDE ALL WIRES NECESSARY FOR THE PROPER FUNCTION OF THE SYSTEM WHETHER INDICATED ON DRAWING OR NOT.
7. ALL D.C. WIRING SHALL BE #10 AWG MINIMUM.
8. THE WIRE SIZE INDICATED IN THE HOMERUN SHALL BE USED THROUGHOUT THE CIRCUIT.
9. ALL EMPTY CONDUIT RUNS IN EXCESS OF 10 FT. SHALL BE PROVIDED WITH A PULL WIRE OR FISH TAPE/CORD.
10. ELECTRICAL CONTRACTOR TO INCLUDE GROUND WIRE IN ALL RACEWAYS. SIZE RACEWAYS AS NECESSARY TO COMPLY WITH NEC.
11. ALL RECEPTACLES LOCATED WITHIN A 6 FEET OF A SINK SHALL BE GFI TYPE.
12. GROUND, PHASE AND NEUTRAL CONDUCTORS SHALL BE PIG-TAILED IN OUTLET BOXES OR MULTI-OUTLET ASSEMBLY FOR EACH RECEPTACLE SO THAT GROUND AND ELECTRICAL SERVICE WILL NOT BE DISTURBED TO OTHER RECEPTACLES ON THE SAME MULTI-WIRE CIRCUIT IF RECEPTACLE IS REMOVED. THE GROUNDING TERMINALS OF ALL RECEPTACLES SHALL BE GROUNDED BY AN INSULATED COPPER CONDUCTOR IN ACCORDANCE WITH TABLE 250.122 N.E.C.
13. ELECTRICAL DESIGN HAS BEEN BASED ON THE INSTALLATION OF 75°C. CONDUCTORS CONNECTED TO TERMINAL LUGS AND EQUIPMENT U.L. LISTED FOR A MINIMUM 75°C. CONDUCTORS TERMINATED ON EQUIPMENT WITH A LOWER RATING (60°C) OR NO RATING SHOWN SHALL HAVE CONDUCTOR SIZE INCREASED TO CONFORM TO N.E.C. TABLE 310-16 AND U.L. NO. 489 REQUIREMENTS.
14. SWITCHBOARDS, PANELBOARDS, DISCONNECT SWITCHES, TRANSFORMERS AND CONTACTORS ARE TO BE 'LISTED' AND 'IDENTIFIED' AS RATED FOR A MINIMUM OF 75°C CONDUCTOR TERMINATION.
15. REFER TO VOLTAGE DROP SCHEDULE: FOR CONDUCTORS SIZED PER NEC ON DRAWINGS, INCREASE SIZE BY NUMBER OF STANDARD COPPER SIZES SHOWN IN TABLE TO COMPENSATE FOR VOLTAGE DROP, AND INCREASE CONDUIT AND GROUNDING CONDUCTOR SIZES ACCORDINGLY AS PER NEC. CONTACT ENGINEER OF RECORD FOR ASSISTANCE IF CIRCUIT LENGTH FROM SOURCE TO LOAD EXCEEDS MAXIMUMS SHOWN.
16. THE CONTRACTOR SHALL TEST AND BALANCE THE LOADING ON ALL PANELBOARDS AS CLOSELY AS POSSIBLE TO THE SATISFACTION OF THE ENGINEER.
17. PROVIDE TYPED CIRCUIT DIRECTORIES FOR ALL PANELBOARDS TO INDICATE TYPE OF LOAD SERVED AND AREA SERVED (E.G. RECEPTACLES-OFFICE 201.).
18. ELECTRICAL EQUIPMENT REQUIRING ACCESS SUCH AS JUNCTION BOXES OR CONNECTIONS TO EQUIPMENT SHALL NOT BE INSTALLED ABOVE INACCESSIBLE CEILINGS OR BEHIND WALLS. CONTRACTOR SHALL REROUTE ANY EXISTING CONDUIT AND JUNCTION BOXES ABOVE INACCESSIBLE CEILINGS/WALLS WHICH CANNOT BE RELOCATED SHALL BE ABANDONED WITH ALL WIRING REMOVED.
19. ALL RECEPTACLES AND JUNCTION BOXES WITH BRANCH CIRCUITING SHALL BE LABELED WITH PANEL DESIGNATION AND CIRCUIT NUMBER. CLEARLY LABEL ON FACE OF COVERPLATE OR PLACE TAG BEHIND COVERPLATE
20. REFER TO ARCHITECTURAL REFLECTED CEILING PLANS FOR EXACT LOCATION OF LIGHTING FIXTURES AND GRID COORDINATION. THE ELECTRICAL CONTRACTOR SHALL VERIFY THE TYPE OF CEILING SYSTEM WITH THE GENERAL CONTRACTOR OR CEILING CONTRACTOR TO INSURE THAT ALL CEILING RECESSED LIGHTING FIXTURES ARE COMPATIBLE WITH THE CEILING SYSTEM BEING INSTALLED. LIGHTING FIXTURES SHOULD NOT BE ORDERED UNTIL TYPE OF CEILING HAS BEEN VERIFIED.
21. ELECTRICAL CONTRACTOR SHALL VERIFY ALL DOOR SWINGS WITH THE ARCHITECTURAL PLANS PRIOR TO INSTALLING LIGHT SWITCH BOXES. LIGHT SWITCHES SHALL BE LOCATED ON LOCK SIDE OF THE DOOR UNLESS PHYSICALLY IMPOSSIBLE TO INSTALL IN THIS LOCATION. VERIFY EXACT LOCATION WITH ARCHITECT PRIOR TO INSTALLATION IN THIS EVENT.
22. ELECTRICAL CONTRACTOR TO VERIFY EXACT PLACEMENT OF ALL DEVICES SHOWN ON THE ELECTRICAL CONSTRUCTION DOCUMENTS WITH ARCHITECTURAL, MECHANICAL, AND PLUMBING DRAWINGS PRIOR TO FINAL PLACEMENT. THE DRAWINGS INDICATE SIZE AND GENERAL LOCATION OF WORK. THE EXACT LOCATION AND ELEVATION OF ALL LIGHTING FIXTURES, RECEPTACLES, TELEPHONE/DATA OUTLETS, ETC., SHALL BE DETERMINED FROM ARCHITECTS DRAWINGS UNLESS NOTED OTHERWISE.
23. REFER TO ARCHITECTURAL PLANS FOR EXACT DIMENSIONS OF THE BUILDING. REFER TO MECHANICAL OR PLUMBING PLANS FOR EXACT LOCATION OF THEIR EQUIPMENT. ELECTRICAL CONTRACTOR BEFORE INSTALLING ANY WORK SHALL MAKE SURE IT DOES NOT INTERFERE WITH CLEARANCES AS SHOWN ON THE ARCHITECTURAL DRAWINGS OR OTHER TRADE DRAWINGS.
24. ELECTRICAL CONTRACTOR SHALL VERIFY ALL EQUIPMENT REQUIREMENTS WITH ALL TRADES BEFORE INSTALLING CONDUIT OR CONDUCTORS FROM POWER SOURCE TO EQUIPMENT TERMINATION.
25. ALL WIRING DEVICES SHALL BE SPECIFICATION GRADE.
    A. DEVICE AND COVER PLATE FINISHES FOR EMERGENCY CIRCUITS SHALL BE RED.
    B. DEVICE AND COVER PLATE FINISHES FOR ISOLATED GROUND CIRCUITS SHALL BE ORANGE.
27. ALL DEVICES SHALL BE MOUNTED TO COMPLY WITH AMERICAN DISABILITIES ACT.
28. CONTRACTOR SHALL BE RESPONSIBLE FOR PROPER SIZING OF ALL MOTOR OVERLOAD DEVICES IN STARTERS BASED ON ACTUAL NAMEPLATE RATING ON THE MOTORS BEING INSTALLED.
29. CONTRACTOR SHALL NOTE U.L. LABEL/NAMEPLATE ON MECHANICAL EQUIPMENT, OR SHOULD LOCAL INSPECTOR CALL FOR THE OVERLOAD PROTECTIVE DEVICE TO BE FUSED, THE ELECTRICAL CONTRACTOR SHALL PROVIDE A FUSED DISCONNECT SWITCH WITH PROPER SIZE FUSES AT THE SWITCH LOCATION AS INDICATED ON THE DRAWINGS.
30. ELECTRICAL BOXES IN FIRE RATED PARTITIONS SHALL NOT EXCEED 16 SQUARE INCHES IN AREA (IF 4"x4"), SHALL BE MADE OF STEEL, AND SHALL BE SUCH THAT THE CUMULATIVE AREA OF BOX 'CUTOUTS' IN THE FIREWALL DOES NOT EXCEED 100 SQUARE INCHES PER 100 SQUARE FEET OF WALL AREA. ELECTRICAL BOXES ON OPPOSITE SIDES OF THE SAME FIREWALL SHALL BE SEPARATED BY A HORIZONTAL AND VERTICAL DISTANCE OF NOT LESS THAT 24 INCHES. THE ELECTRICAL CONTRACTOR SHALL MAKE MINOR ADJUSTMENTS, AS NECESSARY, TO ELECTRICAL BOX LOCATIONS TO ENSURE COMPLIANCE WITH THIS REQUIREMENT SINCE BOX LOCATIONS ARE TYPICALLY NOT DIMENSIONED ON THE DRAWINGS. CONSULT ARCHITECT IF CLARIFICATION IS REQUIRED.
31. ALL PENETRATIONS THRU FIRE RATED WALL ASSEMBLIES SHALL BE PROTECTED WITH AN APPROVED FIRESTOP SYSTEM OR IN ACCORDANCE WITH IBC SECTION 712.3.1 WHERE APPLICABLE.
32. SEAL ALL CONDUIT PENETRATIONS THROUGH RATED WALLS AND FLOORS TO MAINTAIN FIRE INTEGRITY. REFER TO ARCHITECTURAL DRAWINGS FOR FIRE RATED WALL OR FLOOR LOCATIONS.
33. ELECTRICAL CONTRACTOR SHALL USE CONDULET SEALING FITTINGS WITH APPROVED SEALING COMPOUND ON ALL CONDUITS PASSING FROM INTERIOR TO EXTERIOR OF A BUILDING AND WHERE DIFFERING SPACE TEMPERATURES EXIST.
34. AFTER FINAL INSTALLATION, ELECTRICAL CONTRACTOR WILL BE RESPONSIBLE FOR FILLING ALL VOIDS AROUND CONDUIT PENETRATIONS AND OTHER CORE DRILLS/OPENINGS IN SLAB WITH FIRE SAFE REMOVABLE MASTIC; FILL SHALL EQUAL FIRE RATING OF THE FLOOR.
35. ELECTRICAL CONTRACTOR SHALL VISIT THE SITE PRIOR TO SUBMISSION OF BID. HE SHALL NOTE EXISTING CONDITIONS, FAMILIARIZE HIMSELF WITH THE LAYOUT OF EXISTING, LIGHTING, POWER SYSTEMS, AND FIRE ALARM IN ORDER TO THOROUGHLY UNDERSTAND THE SCOPE OF THE MODIFICATIONS TO THE PRESENT JOB AND THE EFFECT OF THOSE MODIFICATIONS. SHOULD CONTRACT DOCUMENTS' SCOPE OF WORK DIFFER FROM FIELD CONDITIONS THAT CAUSE AN UPSET IN BID, IT SHALL BE REPORTED TO THE ENGINEER OF RECORD SO REVISED BID DOCUMENTS OR ADDENDUM(S) CAN BE ISSUED. NEGLECT TO VISIT PROPOSED SITE SHALL BE THE ELECTRICAL CONTRACTOR'S SOLE RESPONSIBILITY.
36. ENGINEER OF RECORD SHALL NOT BE RESPONSIBLE FOR THE VERIFICATION OF EXISTING CONDITIONS THAT ARE NOT READILY VISIBLE. THIS INCLUDES BUT IS NOT LIMITED TO: EQUIPMENT, PIPING, DEVICES OR ITEMS THAT ARE LOCATED BELOW GRADE, WITHIN PARTITIONS, ENCLOSED IN CHASES OR ABOVE INACCESSIBLE CEILINGS. ALLOWANCES ARE TO BE INCLUDED FOR UNFORESEEN CONDITIONS THAT MAY AFFECT THE CONTRACTOR'S SCOPE OF WORK. MINOR DEVIATIONS REQUIRED FOR ACCOMPLISHING THE INTENT OF THIS DESIGN ARE TO BE INCLUDED IN THAT ALLOWANCE.
37. PROVIDE "HOSPITAL" GRADE RECEPTACLES IN ALL "PATIENT CARE" AREAS AS DEFINED PER NEC ARTICLE 517. THIS SHALL INCLUDE EXISTING RECEPTACLES NOTED TO REMAIN THAT ARE LOCATED WITHIN NEW DESIGNATED PATIENT CARE AREAS.
38. PRIOR TO ROUGH IN, ELECTRICAL CONTRACTOR SHALL VERIFY WITH MEDICAL EQUIPMENT VENDOR ALL ELECTRICAL REQUIREMENTS, DEVICES, WIRE AND CONDUIT SIZES, AND LOCATIONS FOR MEDICAL EQUIPMENT BEING INSTALLED. SEE MEDICAL EQUIPMENT VENDOR'S SPECIFICATIONS, SCHEMATICS AND DRAWINGS FOR EXACT ELECTRICAL REQUIREMENTS AND COORDINATION.
39. CONTRACTOR MAY USE "HCF" CABLE IN ALL PATIENT CARE AREAS; METAL CLAD (MC), ROMEX AND AC CABLE ARE NOT PERMITTED IN PATIENT CARE AREAS PER NEC ARTICLE 517. COORDINATE PATIENT CARE AREAS WITH OWNER AND AS DEFINED PER NEC ARTICLE 517. ALL WIRING IN ALL PATIENT CARE AREAS (EXISTING OR NEW) SHALL COMPLY WITH N.E.C. ARTICLE 517.13 (A) & (B).
40. GROUNDING SYSTEM IN PATIENT CARE AREAS SHALL BE TESTED IN ACCORDANCE WITH NEC AND NFPA 99 4.3.3. SUBMIT FINAL REPORT TO OWNER UPON PROJECT COMPLETION.
41. UNLESS OTHERWISE SPECIFIED, TELEPHONE AND DATA OUTLETS SHALL HAVE A 3/4" CONDUIT WITH PULL STRING FROM JUNCTION-BOX TO CEILING SPACE FOR EACH GANG. PLASTIC BUSHINGS SHALL BE PROVIDED AT THE END OF THE CONDUIT LOCATED WITHIN CEILING SPACE.
42. TENANT WILL PROVIDE UNDER SEPARATE CONTRACT (UNLESS OTHERWISE NOTED HERE WITHIN CONTRACT DOCUMENTS) WITH OTHERS, EQUIPMENT AND CABLING FOR TELEPHONE DATA, INTERCOM AND SECURITY SYSTEMS
43. ELECTRICAL CONTRACTOR SHALL COORDINATE ANY POWER REQUIREMENTS WITH SECURITY SYSTEM VENDOR PRIOR TO WALL CLOSING. POWER FOR LOW VOLTAGE TRANSFORMERS FOR CARD ACCESS MAY BE EXTENDED FROM NEAREST RECEPTACLE BRANCH CIRCUIT.

ELECTRICAL SYMBOLS LIST

SYMBOL	DESCRIPTION
	FIXTURE-FLUORESCENT-CEILING, WALL, STRIP
	DENOTES FIXTURE ON NIGHT LIGHT CIRCUIT
	FIXTURE-INCANDESCENT/FLUORESCENT-CEILING, WALL BRACKET
	FIXTURE - HID - WALL BRACKET
	FIXTURE-INCANDESCENT-FLOODLIGHT/EMERGENCY LIGHT
	EXIT LIGHT-CEILING, WALL, WITH DIRECTIONAL ARROWS
	EMERGENCY BATTERY UNIT, WALL MOUNTED
\$ \$3 \$a	SWITCH-SINGLE POLE, THREEWAY, SUBSCRIPT DENOTES OUTLET CONTROLLED M.H. 4'-0"
\$PL \$D	SWITCH-PILOT LIGHT, DIMMER M.H. 4'-0"
\$M	SWITCH-MOTOR RATED
	RECEPTACLE-20A-125 VOLTS-DUPLEX, DOUBLE DUPLEX M.H. 1'-6"
	RECEPTACLE-DUPLEX-COUNTER HEIGHT-20A-125 VOLT
	SPECIAL RECEPTACLE AS NOTED
	JUNCTION BOX
	OUTLET-TELEPHONE - WALL WITH RING AND STRING TO CEILING SPACE M.H. 1'-6" UNLESS OTHERWISE NOTED.
	OUTLET - VOICE/DATA WALL WITH RING AND STRING TO CEILING SPACE M.H. 1'-6"
	TELEPHONE TERMINAL BACKBOARD
	PANELBOARD 277/480 VOLTS
	PANELBOARD 120/208 VOLTS
	DISCONNECT SWITCH-UNFUSED, FUSED
	CONTROL DEVICE BY EQUIPMENT CONTRACTOR
	MOTOR-SINGLE PHASE, THREE PHASE, HORSEPOWER AS NOTED
	HEATING ELEMENT-CAPACITY AS NOTED
	FIRE ALARM-PULL STATION M.H. 4'-0"
	FIRE ALARM - AUDIBLE SIGNAL AND VISUAL FLASHER
	FIRE ALARM-VISUAL FLASHER
	FIRE ALARM-SMOKE DETECTOR
	FIRE ALARM-DUCT SMOKE DETECTOR-RETURN DUCT, SUPPLY DUCT
	SMOKE DAMPER
	FIRE ALARM - DUCT SMOKE DETECTOR
	DRY TYPE TRANSFORMER
	ANNUNCIATOR PANEL OR TERMINAL PANEL-AS NOTED
	GROUND CONNECTION
	BRANCH CIRCUIT-IN CEILING OR WALLS (2#12+G UNLESS NOTED OTHERWISE)
	BRANCH CIRCUIT-IN OR UNDER FLOOR (2#12+G UNLESS NOTED OTHERWISE)
	BRANCH CIRCUIT-EXPOSED ON CEILING OR WALLS (2#12+G UNLESS NOTED OTHERWISE)
	HOMERUN TO PANEL-LETTER AND NO. INDICATES CIRCUIT NUMBER. NO. OF CROSSLINES INDICATES NO. OF CONDUCTORS WHEN MORE THAN 2+G.
TV	OUTLET - CABLE TELEVISION WALL WITH RING AND STRING TO CEILING SPACE
TC	TIMECLOCK
IC	INTERCOM STATION
M1	DUAL TECHNOLOGY WALL SWITCH OCCUPANCY SENSOR. WATTSTOPPER # DSW-100
M2	PASSIVE TECHNOLOGY WALL SWITCH OCCUPANCY SENSOR. WATTSTOPPER # PW-100
M3	3 WAY, PASSIVE TECHNOLOGY WALL SWITCH OCCUPANCY SENSOR. WITH INTEGRATED NIGHT LIGHT. WATTSTOPPER # PW-103N
M4	DUAL RELAY, DUAL TECHNOLOGY WALL SWITCH OCCUPANCY SENSOR. WATTSTOPPER # DW-100-24
M5	3 WAY, DUAL TECHNOLOGY WALL SWITCH OCCUPANCY SENSOR. WATTSTOPPER # DW-103
FT	FAN TIMER - WATTSTOPPER # RT-50
M	DUAL TECHNOLOGY CEILING AREA SENSOR - LOW VOLTAGE. WATTSTOPPER # DT-305
Mv	DUAL TECHNOLOGY CEILING AREA SENSOR - LINE VOLTAGE. WATTSTOPPER # DT-335
P	UNIVERSAL VOLTAGE POWER PACK RELAY SYSTEM. WATTSTOPPER # BZ-150
#	MECHANICAL EQUIPMENT DESIGNATION
C	OUTLET BOX FOR CARD ACCESS WITH BLANK COVER - M.H. 4'-0" PROVIDE 3/4" EMPTY CONDUIT STUBBED TO ACCESSIBLE CEILING SPACE.

ABBREVIATIONS LIST:

AFF	ABOVE FINISHED FLOOR	MH	MOUNTING HEIGHT
AHU	AIR HANDLING UNIT	MOD	MOTOR OPERATED DAMPER
CU	CONDENSING UNIT	MTD	MOUNTED
C, CDT	CONDUIT	RTU	ROOF TOP UNIT
CH	COUNTER HEIGHT	TC	TIME CLOCK
DWG	DRAWING	UH	UNIT HEATER
EF	EXHAUST FAN	VAV	VARIABLE AIR VOLUME
GRD	GROUND	W/	WITH
GFI	GROUND FAULT INTERRUPTER	WP	WEATHERPROOF
HP	HORSEPOWER	WR	WEATHER RESISTANT
MCA	MINIMUM CIRCUIT AMPS	XFMR	TRANSFORMER
MOCP	MAXIMUM OVERCURRENT PROTECTIVE DEVICE	XR	EXISTING TO REMAIN
		RX	REMOVE EXISTING

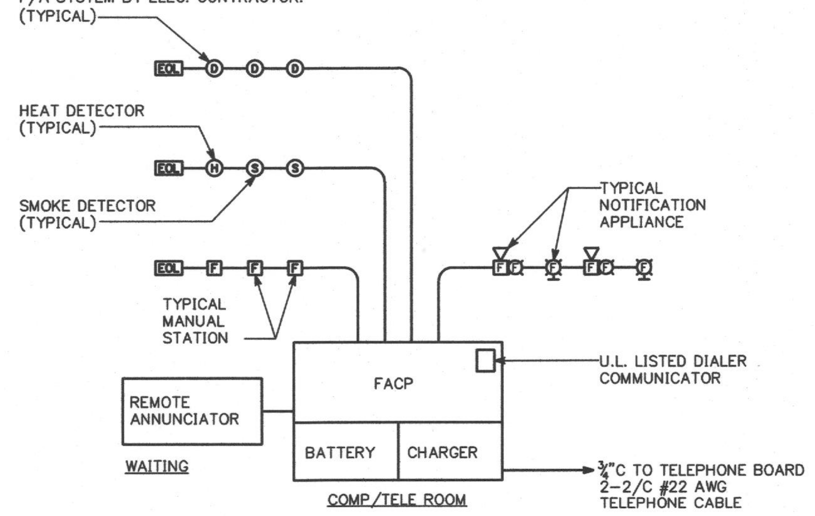

FIRE ALARM SYSTEM NOTE: LAYOUT AND ZONING IS SCHEMATIC FOR BIDDING ONLY. FIRE ALARM SYSTEM VENDOR SHALL PREPARE COMPLETE SYSTEM SHOP DRAWINGS AND SUBMIT TO LOCAL FIRE MARSHAL FOR APPROVAL PRIOR TO ROUGH-IN. ZONING SHALL BE PROVIDED AS DIRECTED BY FIRE MARSHAL.

FIRE ALARM RISER DIAGRAM

NO SCALE

SYSTEM OPERATION

1. UPON ACTIVATION OF ANY PULL STATION, AUTOMATIC DETECTION DEVICE OR SPRINKLER FLOW SWITCH (IF APPLICABLE) THE SYSTEM SHALL:
   A. ANNUNCIATE THE ALARMED DEVICE TYPE AND ZONE LOCATION AT THE FIRE ALARM CONTROL PANEL,
   B. ACTIVATE THE AUDIBLE ALARM EVACUATION SIGNAL THROUGHOUT THE PROPERTY AND,
   C. ACTIVATE THE VISUAL ALARM INDICATING APPLIANCES THROUGHOUT THE PROPERTY.
2. UPON DETECTION OF PRODUCTS OF COMBUSTION, EACH DUCT SMOKE DETECTOR SHALL SHUT DOWN ALL AIR HANDLING UNITS.
3. ACTIVATION OF A SUPERVISORY CIRCUIT SHALL ANNUNCIATE A TROUBLE CONDITION AT THE CONTROL PANEL.
4. FIRE ALARM SYSTEM WILL BE MONITORED BY A UL LISTED CENTRAL RECEIVING STATION.

FIRE ALARM NOTES

1. SYSTEM SHALL BE CLASS "B" OR AS REQUIRED BY LOCAL AUTHORITIES.
2. F.A.C.P. - GAMEWELL, FIRE LITE, OR APPROVED EQUAL.
   A. THE CONTROL PANEL SHALL BE CAPABLE OF EXPANSION TO THE MAXIMUM NUMBER OF MODULES TO SATISFY THE SPACE ZONING PLUS AN ADDITIONAL TWENTY PERCENT OF ANY MIX, EACH WITH UP TO EIGHT INITIATING OR INDICTING CIRCUITS PER MODULE, FOR UP TO A MAXIMUM OF 120 CLASS A OR B (NFPA STYLE D/B) INITIATING CIRCUITS.
   B. NFPA 71,72 A,B,C,D POWER LIMITED APPLICATIONS FOR NEC 760 AND FED. REGISTER VOL. 56 3144 JULY 28, 1991.
   C. FM APPROVED AND U.L. LISTED.
   D. CHARGER AND BATTERY PACK FOR MIN. 60 HOURS STAND-BY SERVICE ON EMERGENCY POWER.
2. SYSTEM SHALL BE AS ACCEPTED BY NATIONAL AND LOCAL CODES AND AUTHORITIES AND SHALL COMPLY WITH ADA REQUIREMENTS.
3. SYSTEM SHALL HAVE AN ALARM VERIFICATION MODE TO WAIT 60 SECONDS BEFORE RE-TESTING FOR ALARM.
4. SYSTEM SHALL BE INSTALLED PER NFPA 72.
5. PROVIDE ALLOWANCE FOR SMOKE DETECTORS MOUNTED ABOVE AND BELOW THE CEILING SHOULD THEY BE REQUIRED BY THE AUTHORITY HAVING JURISDICTION AND THE STATE FIRE MARSHALL.
6. FIRE ALARM SYSTEM TO BE COMPATIBLE WITH ANY REQUISITE BASE BUILDING SYSTEMS ALREADY INSTALLED. FIRE ALARM SYSTEM: CONTRACTOR SHALL FURNISH AND INSTALL A COMPLETE AND OPERABLE FIRE ALARM SYSTEM, MATCHING EXISTING SYSTEM, INCLUDING ALL REQUIRED FIRE ALARM EQUIPMENT, DEVICES, WIRING AND CONDUIT. DEVICES INDICATED ON THE PLAN ARE INTENDED ONLY AS A GUIDE. PROVIDE ALL EQUIPMENT, DEVICES AND WIRING AS REQUIRED FOR A COMPLETE AND FUNCTIONAL SYSTEM WHICH MEETS THE REQUIREMENTS OF THE FIRE PROTECTION CODE OF THE LOCAL AUTHORITY HAVING JURISDICTION. COORDINATE WITH CERTIFIED FIRE ALARM CONTRACTOR FOR TYPE AND LOCATION OF DEVICES AND FOR CONNECTION TO EXISTING SYSTEM. CONNECT FIRE ALARM SYSTEM TO ALL NECESSARY BUILDING FIRE SAFETY FUNCTIONS. SUBMIT SIGNED AND SEALED FIRE ALARM SYSTEM DESIGN DOCUMENTS AND SHOP DRAWINGS FOR APPROVAL. ALL COSTS ASSOCIATED WITH THE FIRE ALARM SYSTEM MODIFICATIONS AND ADDITIONS ARE TO BE INCLUDED IN THE CONTRACTOR'S BID PRICE.
7. PROVIDE DUCT SMOKE DETECTORS IN ALL AIR HANDLING UNITS RATED 2000 CFM AND GREATER. COORDINATE REQUIREMENTS WITH MECHANICAL CONTRACTOR. CONNECT TO BUILDING FIRE ALARM SYSTEM OR DUCT DETECTOR MONITORING PANEL.
8. ELECTRICAL CONTRACTOR SHALL SUBMIT FIRE ALARM SHOP DRAWINGS FOR REVIEW TO THE ARCHITECT/ENGINEER. IN ADDITION THREE COMPLETE SETS OF CONTRACT DRAWINGS SHALL BE PROVIDED FOR THE REVIEW AND APPROVAL FROM THE LOCAL FIRE PROTECTION DIVISION HAVING JURISDICTION, AN APPROVED SET OF THE SUBMITTED DOCUMENTS SHALL BE AT THE JOB SITE FOR THE USE OF THE FIRE PROTECTION DIVISION DURING THEIR INSPECTION.

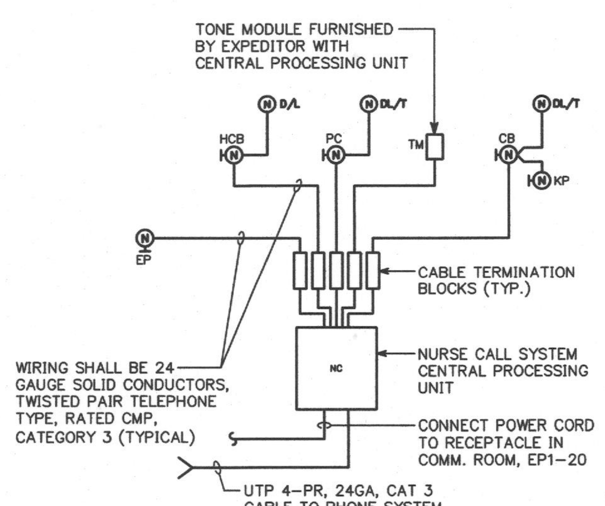

NURSE CALL SYSTEM NOTE: LAYOUT IS SCHEMATIC AND FOR INFORMATION ONLY. NURSE CALL SYSTEM VENDOR SHALL PREPARE COMPLETE SYSTEM SHOP DRAWINGS AND SUBMIT TO ARCHITECT FOR APPROVAL PRIOR TO ROUGH-IN.

NURSE CALL SYSTEM SCHEMATIC

NO SCALE

LIGHTING FIXTURE SCHEDULE

TYPE	MANUFACTURER	CATALOG NUMBER	DESCRIPTION	LAMP QUANTITY	LAMP DESCRIPTION	FIXTURE WATTAGE	VOLTAGE
A	LITHONIA LIGHTING	2GTL2-33L-FW-EZ1-LP835	2x2 LED FIXTURE WITH ACRYLIC PRISMATIC LENS.	LED	3300 LUMENS LP835/82CRI 3500K	38W	MVOLT (120-277V)
B	LITHONIA LIGHTING	2FSL2-33L-EZ1-LP835	2x2 LED VOLUMETRIC LENS WITH 0-10V DIMMING DRIVER.	LED	3300 LUMENS LP835/82CRI 3500K	34.5W	MVOLT (120-277V)
C	LITHONIA LIGHTING	2FSL4-40L-ADP-EZ1-LP835	2x4 LED VOLUMETRIC LENS WITH 0-10V DIMMING DRIVER.	LED	4000 LUMENS LP835/82CRI 3500K	39W	MVOLT (120-277V)
D	LITHONIA LIGHTING	2GTL4-48L-FW-EZ1-LP835-NX	2x4 LED FIXTURE WITH ACRYLIC PRISMATIC LENS AND DIMMING DRIVER.	LED	4600 LUMENS LP835/82CRI 3500K	46W	MVOLT (120-277V)
DE	LITHONIA LIGHTING	2GTL4-48L-FW-EZ1-LP835-EL14L	SAME AS TYPE "D" EXCEPT WITH 1400 LUMEN EMERGENCY BATTERY PACK TO OPERATE LAMPS FOR 90 MINS.	LED	4600 LUMENS LP835/82CRI 3500K	46W	MVOLT (120-277V)
F	GOTHAM	EVO-35/104AR-MWD-LSS-MVOLT-EZ1	4" LED DOWNLIGHT WITH CLEAR SEMI SPECULAR REFLECTOR. WET LOCATION LISTED.	LED	1000 LUMENS 3500K	13W	MVOLT (120-277V)
FE	GOTHAM	EVO-35/104AR-MWD-LSS-MVOLT-EZ1-EL	SAME AS TYPE "F" EXCEPT WITH 500 LUMEN EMERGENCY BATTERY PACK TO OPERATE LAMPS FOR 90 MINS.	LED	1000 LUMENS 3500K	13W	MVOLT (120-277V)
G1	LITHONIA LIGHTING	ZL2N-L48-2000LM-MDD-MVOLT-35K-80CRI-WH	48" LED STRIP FIXTURE WITH MEDIUM DIFFUSER.	LED	2000 LUMENS 3500K	32W	MVOLT (120-277V)
G2	LITHONIA LIGHTING	ZL2N-L24-2000LM-MDD-MVOLT-35K-80CRI-WH	24" LED STRIP FIXTURE WITH MEDIUM DIFFUSER.	LED	2000 LUMENS 3500K	32W	120V
H	LITHONIA LIGHTING	WL2-18L-EZ1-LP835	WALL/SURFACE MOUNTED LED WITH ACRYLIC DIFFUSER.	LED	2500 LUMENS 3500K	24W	MVOLT (120-277V)
J	-	FURNISHED BY OWNER	OPERATING LIGHT WITH FLEXIBLE ARM AND INTEGRAL SWITCH	LED	INCLUDED	-	120V
K	LITHONIA LIGHTING	RTL4-30L-EZ1-LP835	1x4 RECESSED VOLUMETRIC LED WITH ACRYLIC PRISMATIC REFRACTOR.	LED	2500 LUMENS LP835/82CRI 3500K	30W	MVOLT (120-277V)
KE	LITHONIA LIGHTING	RTL4-30L-EZ1-LP835-EL14L	SAME AS TYPE "K1" EXCEPT WITH 1400 LUMEN EMERGENCY BATTERY PACK TO OPERATE LAMPS FOR 90 MINS.	LED	2500 LUMENS LP835/82CRI 3500K	30W	MVOLT (120-277V)
L	LITHONIA LIGHTING	2M-432-A12125-MVOLT-GEBIOPS	2'x4' SURFACE FLUORESCENT TROFFER WITH ACRYLIC PRISMATIC LENS, FULLY GASKETED FLUSH STEEL DOOR AND TWO ELECTRONIC BALLAST(2 LAMP). FOR DUAL LIGHT LEVEL	4	F032T8 41K	110W	UNIVERSAL (120-277V)
P	LITHONIA LIGHTING	LQM P WIR120M "X-RAY IN USE"	LED "X-RAY IN USE" SIGN WITH WHITE HOUSING, RED LETTERS	LED	LED	.5W	120V
X1	LITHONIA LIGHTING	LQM SERIES	LED EMERGENCY EXIT SIGN WITH WHITE HOUSING AND INTEGRAL BATTERY/ CHARGER REFER TO FLOOR PLANS FOR MOUNTING AND LOCAL CODES FOR COLOR OF LETTERS. SEE NOTE 2 BELOW.	LED	LED	1.0W	120/277V
X2	LITHONIA LIGHTING	QUANTUM SERIES ELM2LED	6 VOLT LED EMERGENCY BATTERY LIGHT WITH TWIN LAMPS, WHITE THERMOPLASTIC HOUSING AND INTEGRAL LEAD CALCIUM BATTERY AND CHARGER. SEE NOTE 2 BELOW	(2) LED	-	1.4W	120/277V
X3	LITHONIA LIGHTING	LHQMLEDR/GHO	SELF POWERED COMBINATION LED EXIT/2 LAMP EMERGENCY LIGHT WITH INTEGRAL HIGH OUTPUT BATTERY AND CHARGER. ARROWS AND FACING AS SHOWN - LETTER COLOR PER LOCAL CODE. (LESS HEADS IF NOT SHOWN ON PLAN). SEE NOTE 2 BELOW.	LED	LED	4.3W	120/277V
X4	LITHONIA LIGHTING	ELA-T-QWP-L0309	TWIN HEAD WEATHERPROOF LED REMOTE EMERGENCY LIGHTING HEAD, SEALED AND GASKETED, WHITE FINISH.	(2) LED	-	-	120/277V

NOTES:
1. ALL LIGHTING FIXTURES SHALL BE APPROVED BY THE OWNER AND ARCHITECT PRIOR TO ORDERING. NO EXCEPTIONS.
2. ALL LIGHT FIXTURES PROVIDED WITH BATTERY BACKUP SHALL BE CAPABLE OF PROVIDING A MINIMUM OF 90 MINUTES MAINTAINED ILLUMINATION DURING POWER FAILURE.
3. CONTACT CED LIGHTING DISTRIBUTOR, DAVID VAN LAEYS, (951) 551-5611 FOR ALTERNATE QUOTE.
4. ALTERNATE FIXTURES WILL NOT BE APPROVED.

VOLTAGE DROP SCHEDULE 20 AMPERE CIRCUITS

120 VOLT		277 VOLT		MINIMUM CONDUIT SIZE
WIRE LENGTH	WIRE SIZE	WIRE LENGTH	WIRE SIZE	
0'-60'	#12	0'-130'	#12	3/4"
60'-100'	#10	130'-210'	#10	3/4"
100'-150'	#8	210'-340'	#8	3/4"
150'-240'	#6	340'-540'	#6	3/4"
OVER 240'	#4	OVER 540'	#4	1"

NOTES:
1. CIRCUIT LENGTH AS GIVEN SHALL BE THE WIRE LENGTH BETWEEN THE FIRST AND LAST OUTLET ON THE CIRCUIT. HOMERUN LENGTH GIVEN SHALL BE THE WIRE LENGTH BETWEEN THE FIRST OUTLET AND THE PANELBOARD.
2. THE CONTRACTOR SHALL BE RESPONSIBLE FOR DETERMINING THE EXACT ROUTING OF WIRING AND CONDUITS AND SHALL BE RESPONSIBLE FOR SIZING ALL BRANCH CIRCUIT WIRING TO LIMIT VOLTAGE DROP TO 3%. CONTRACTOR SHALL SIZE CONDUIT TO ACCOMMODATE WIRING PER NEC. 20 AMPERE CIRCUITS SHALL BE SIZED AS SHOWN IN SCHEDULE ABOVE.
3. WIRING AND CONDUIT SIZES INDICATED IN PANEL SCHEDULES ARE MINIMUM ONLY. CONTRACTOR SHALL BE RESPONSIBLE FOR DETERMINING EXACT WIRING AND CONDUIT SIZES. CONTRACTOR SHALL PROVIDE SPLICE BLOCKS AND REDUCING PINS AS REQUIRED TO TERMINATE WIRING AND MAKE FINAL CONNECTIONS.
4. BRANCH CIRCUITS IN PANELBOARDS WITH 200% RATED NEUTRAL BUS AND ALL DIMMER RACK CIRCUITS SHALL HAVE DEDICATED NEUTRAL CONDUCTORS.

NURSE CALL SYSTEM

TYPE	LOCATION	DESCRIPTION	CATOLOG #
HCB	PATIENT PREP/ PATIENT RECOVERY SINGLE GANG BACK BOX 48" AFF	HAND HELD CALL BUTTON WITH RESET BUTTON AT WALL SEPARATE EMERGENCY CALL ACTIVATED BY REMOVAL OF PENDANT CHORD FROM WALL PANEL (PREFERED), OR SEPARATE WALL BUTTON. PROVIDE CEILING MOUNTED INDICATION LIGHT IMMEDIATELY OUTSIDE CUBICLE CURTAIN TRACK AT EACH RECOVER/ PREP POSITION.	EXPEDITOR NCCB SERIES
PC	PATIENT TOILET/ PATIENT DRESSING TWO GANG BACK BOX 48" AFF	WALL MOUNTED CALL SWITCH ACTIVATED BY PULL ON CORD. PULL MUST NOT BE CANCELLED BY SECOND OR REPEATED PULL ON CHORD. PROVIDE RESET BUTTON ABOVE CHORD ATTACHMENT, OR SIMILAR SEPARATE RESET PROVISION. PROVIDE WALL MOUNTED INDICATION LIGHT/ TONE DEVICE ABOVE DOOR, LOCATE TO MAXIMIZE STAFF VISIBILITY/ NOTIFICATION.	EXPEDITOR NCPC SERIES
CB	PROCEDURE ROOM SINGLE GANG BACK BACK BOX 48" AFF	EMERGENCY CALL ('CODE BLUE'), WALL MOUNTED CALL BUTTON WITH HINGED 'ELBOW PLATE' TO FACILITATE EMERGENCY ACTIVATION. PUSH ONCE TO INTITIATE CALL, PUSH SECOND TIME TO CANCEL (ALL OFF). PROVIDE WALL MOUNTED INDICATION LIGHT/ TONE DEVICE ABOVE DOOR IDENTIFYING TYPE OF CALL, LOCATED TO MAXIMIZE STAFF VISIBLITY/ NOTIFICATION.	EXPEDITOR P-1C SERIES
EP	NURSE WORK/ SITE MANAGER/ NURSE CONSULTANT/ STAFF LOUNGE BACK BOX FURNISHED BY EXPEDITOR INSTALLED BY ELEC. CONTRACTOR 48" AFF	ZONE ANNUNCIATOR PANEL WITH TONE; SHOWS WHICH ROOMS ARE OCCUPIED, STAFF LOCATION, WHICH PATIENTS ARE NEXT, WHERE ASSISTANCE IS NEEDED OR WHERE A SPECIAL PROCEDURE IS REQUIRED.	EXPEDITOR P-6C SERIES
HC	BUSINESS BACK BOX FURNISHED BY EXPEDITOR INSTALLED BY ELECT. CONTRACTOR 48" AFF	ZONE ANNUNCIATOR PANEL WITH TONE: SHOWS WHICH ROOMS ARE OCCUPIED, STAFF LOCATION, WHICH PATIENTS ARE NEXT, WHERE ASSISTANCE IS NEEDED OR WHERE A SPECIAL PROCEDURE IS REQUIRED.	EXPEDITOR P-6C SERIES
KP	PROCEDURE ROOM TWO GANG BACK BOX 12" AFF BELOW 'CB' DEVICE	KICK PLATE	EXPEDITOR KP-1 SERIES
DL	PATIENT PREP/ PATIENT RECOVERY SINGLE GANG BOX IN CEILING	CEILING MOUNTED DOME LIGHT LOCATED IMMEDIATLY OUTSIDE OF CUBICLE CURTAIN. ACTIVATED BY REMOVAL OF PULL CHORD.	EXPEDITOR DOME
DL/T	PATIENT TOILET/ PATIENT DRESSING/ PROCEDURE ROOM SINGLE GANG BOX ABOVE DOOR	DOME LIGHT WITH TONE LOCATED ABOVE DOOR. ACTIVATED BY PULL CHORD OR CALL BUTTON.	EXPEDITOR DOME
	COMPUTER ROOM	CENTRAL PROCESSING UNIT (CPU); CONTROLS ALL LIGHT PANEL FUNCTIONS. REQUIRES (1) SINGLE LINE (RJ-11C) TELEPHONE JACK AND (1) DEDICATED POWER OUTLET.	EXPEDITOR

ISSUED FOR ARIZONA STATE ASC PLAN REVIEW

Registered Professional Engineer (Electrical) CERTIFICATE NO. 39123 D. J. PENN ARIZONA U.S.A. Date Signed 1/11/18 Expires 6/30/18

d p c e
don penn ▪ consulting engineer
635 Westport Parkway
Suite 300
Grapevine, Texas 76051
Phone: 817-410-2858
Fax: 817-251-8411

TENANT RENOVATIONS FOR:
LIFELINE ACCESS CENTER
325 S. Euclid Ave, Suite 109
Tucson, AZ 85719

Lifeline Vascular Access SM

InSync ARCHITECTURAL DESIGNS, INC.
1213 Old Pylesville Road Whiteford, MD 21160
Office 410-452-8006 Fax 410-452-8046

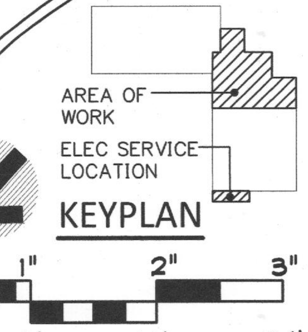

0" 1" 2" 3"
1/8"=1'-0" 8' 16' 24'
1/4"=1'-0" 4' 8' 12'

SCHEDULES, SYMBOLS AND NOTES

REVISIONS		
REV#	DATE	DESCRIPTION
1	6/29/16	PERMIT REVIEW COMMENTS
	1/6/17	ARIZONA STATE ASC PLAN REVIEW

DRAWING NO. E1
SHEET OF 5
DATE 4/13/16 DRAWN BY JCW
JOB NUMBER 11222 CHECKED BY MSW

WDC# 16-25

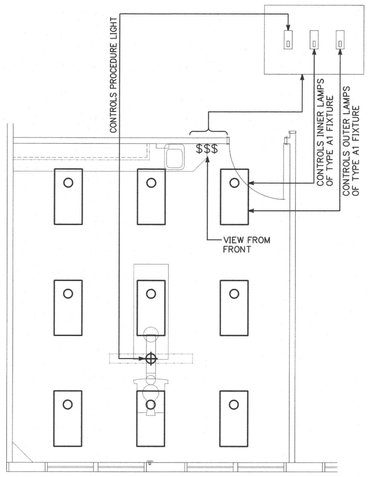

3 / E2 TYPICAL PROCEDURE RM WALL SWITCH DETAIL

NO SCALE

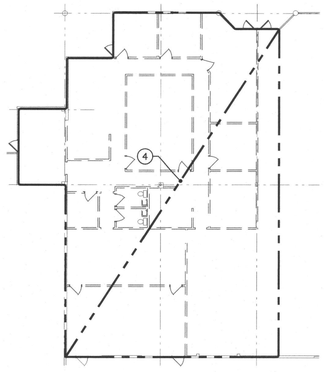

2 / E2 FLOOR PLAN - DEMOLITION

SCALE: 1/16"=1'-0"

GENERAL LIGHTING NOTES:

1. ALL LIGHTING FIXTURES ARE TYPE 'A' UNLESS OTHERWISE NOTED.
2. MULTIPLE SWITCHES AT ONE (1) LOCATION SHALL BE GANGED TOGETHER AND HAVE ONE (1) SWITCH PLATE.
3. MOUNT ALL SWITCHES 42" A.F.F. COORDINATE WITH ARCHITECT PRIOR TO ROUGH-IN.
4. REFER TO TYPICAL PROCEDURE ROOM WALL SWITCH DETAIL ON THIS DRAWING FOR LIGHT SWITCH CONTROL.
5. CONNECT EXIT LIGHTS, EMERGENCY BATTERY UNITS AND NIGHT LIGHTS (NL) TO THE UNSWITCHED PORTION OF LOCAL BRANCH LIGHTING CIRCUIT SERVING RESPECTIVE AREA.
6. FIXTURES WITH EMERGENCY BALLAST SHALL BE WIRED PER MANUFACTURES PRINTED INSTALLATION INSTRUCTIONS SO THAT IN THE EVENT OF A POWER FAILURE THE FIXTURE ENERGIZES REGARDLESS OF SWITCH POSITION. REFER TO LIGHTING FIXTURE SCHEDULE FOR FIXTURES WITH EMERGENCY BALLAST.
7. CERTIFICATION FOR ALL ELECTRICAL WORK AND EQUIPMENT SHALL BE IN COMPLIANCE WITH ALL APPLICABLE LOCAL CODES AND LAWS AND ALL MATERIALS ARE CURRENTLY APPROVED AND LISTED BY A RECOGNIZABLE TESTING LABORATORY.

COORDINATION NOTES:

1. REFER TO ARCHITECTURAL DRAWINGS FOR ADDITIONAL JOB SPECIFIC NOTES.
2. MECHANICAL, PLUMBING AND ELECTRICAL SUBCONTRACTORS ARE REQUIRED TO COORDINATE WITH EACH OTHER AND TO REFER TO ALL SHEETS IN THE SET FOR CONSTRUCTION CONDITIONS, NOT JUST THE DRAWINGS PERTAINING TO THEIR DISCIPLINE.
3. FINAL LOCATION OF ALL SURFACE FEATURES ARE TO BE VERIFIED WITH ARCHITECTURAL DRAWINGS AND/OR ARCHITECT PRIOR TO INSTALLATION.
4. ALL EXPOSED PIPE, CONDUIT, DUCTWORK TO BE PREPPED BY TRADE FOR PRIME AND FINAL PAINT BY G.C. SEE ARCHITECTURAL SPECIFICATIONS.

TYPICAL FIXTURE LEGEND

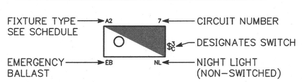

DRAWING NOTES:

1. ONE SWITCH SHALL CONTROL THE INNER LAMPS AND ONE SWITCH SHALL CONTROL THE OUTER LAMPS FOR 50% LIGHT LEVEL OF THE 2X4 FIXTURES.
2. OWNER SHALL BE RESPONSIBLE FOR FURNISHING PROCEDURE LIGHT FIXTURE. ELECTRICAL CONTRACTOR SHALL BE RESPONSIBLE FOR INSTALLING PER MANUFACTURES PRINTED INSTRUCTIONS AND NEC. COORDINATE REQUIREMENTS WITH OWNER PRIOR TO ROUGH IN.
3. IF REQUIRED, ELECTRICAL CONTRACTOR SHALL PROVIDE AND INSTALL JUNCTION BOX AND WEATHERPROOF SWITCH FOR TENANT EXTERIOR BUILDING MOUNTED SIGN. COORDINATE LOCATION IN FIELD.
4. DISCONNECT AND REMOVE ALL PANELBOARDS, LIGHTS, RECEPTACLES, EMERGENCY BATTERY UNITS, EXIT SIGNS, FIRE ALARM DEVICES, ETC. FROM EXISTING SPACE BEING DEMOED UNLESS OTHERWISE NOTED TO REMAIN ON NEW WORK PLANS. REMOVE ALL ASSOCIATED WIRING AND CONDUIT BACK TO SOURCE. COORDINATE WITH LANDLORD ANY OVERLAPPING CIRCUITS OR PANELS THAT NEED TO BE RELOCATED IN ADJACENT SPACE. REMOVE ALL ABANDONED POWER AND COMMUNICATION CABLES AND CONDUITS. COORDINATE PATCHING OF ANY VOIDS LEFT IN EXISTING WALLS, ROOF, ETC WITH GENERAL CONTRACTOR FROM REMOVAL OF ELECTRICAL ITEMS.
5. TIMESWITCH, 2 CHANNEL, 24 HOUR, 120 VOLT COIL, NEMA 1 FLUSH MOUNTED ENCLOSURE, ELECTRONIC WITH BATTERY BACKUP. PARAGON, INTERMATIC, TORK OR APPROVED EQUAL.
6. COORDINATE WITH ARCHITECT AND LIFELINE PROJECT MANAGER TO PROVIDE ADDITIONAL/ALTERNATE SWITCHING LOCATIONS TO CONTROL LIGHTS IN THIS ROOM.

CIRCUIT DESIGNATION LEGEND

- $ 16LP — LIGHTING TOGGLE SWITCH; INDICATES CIRCUIT AND PANEL DESIGNATION.
- M 16LP — WALL MOTION SENSOR SWITCH; INDICATES CIRCUIT AND PANEL DESIGNATION.
- LP-16 — INDICATES CIRCUIT AND PANEL DESIGNATION. BRANCH CIRCUIT HOMERUN
- P 16LP — POWER PACK RELAY SYSTEM; INDICATES CIRCUIT AND PANEL DESIGNATION.
- 16LP — DUPLEX RECEPTACLE; INDICATES CIRCUIT AND PANEL DESIGNATION.
- P 16LP — MOTION SENSOR; INDICATES CIRCUIT AND PANEL DESIGNATION.
- NL 16LP — NIGHT LIGHT; 2x4 FLUORESCENT LIGHT FIXTURE; INDICATES CIRCUIT AND PANEL DESIGNATION.

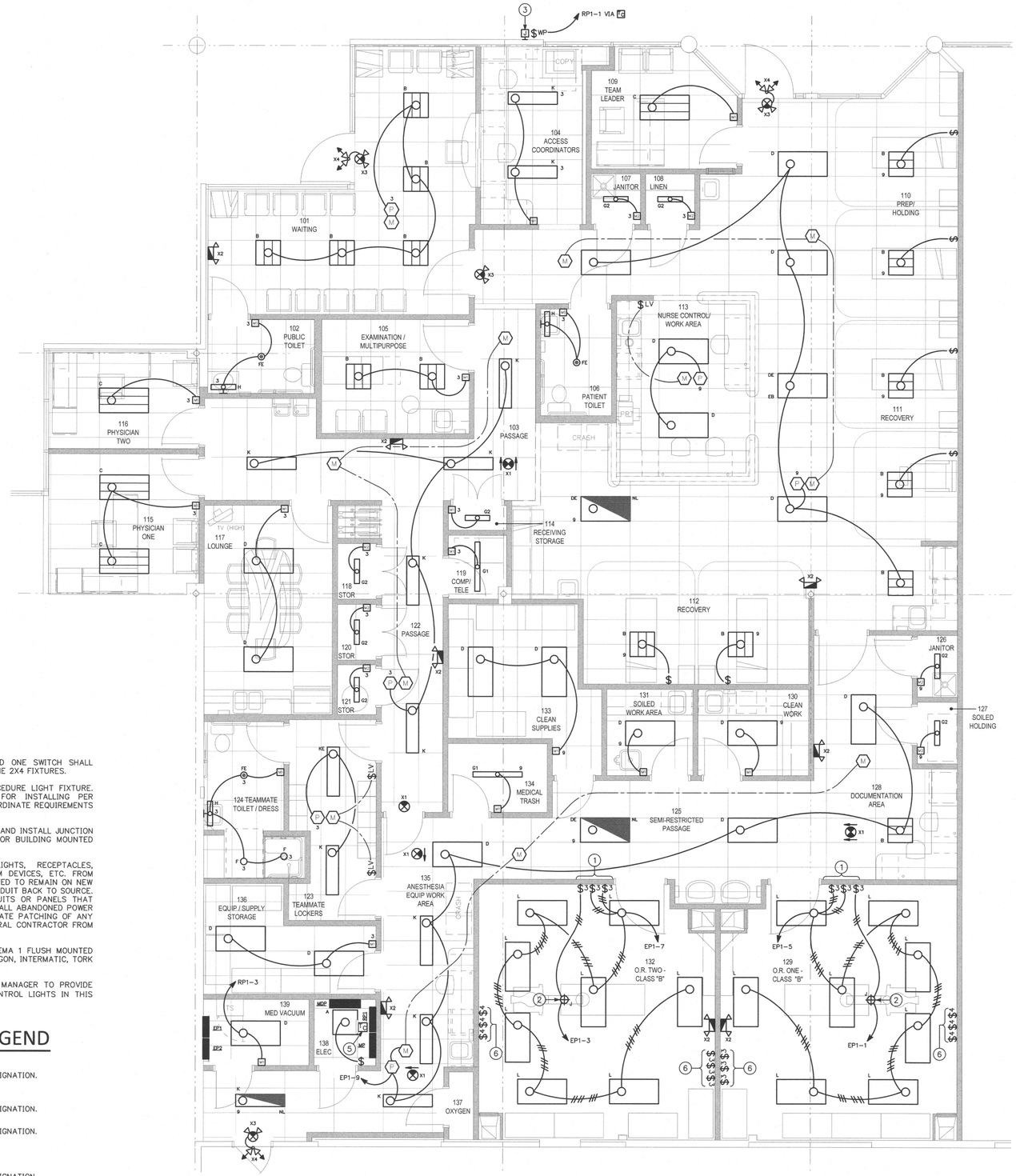

1 / E2 FLOOR PLAN - LIGHTING

SCALE: 1/4"=1'-0"

ISSUED FOR ARIZONA STATE ASC PLAN REVIEW

dpce
don penn • consulting engineer
635 Westport Parkway
Suite 300
Grapevine, Texas 76051
Phone: 817-410-2858
Fax: 817-251-8411

TENANT RENOVATIONS FOR:
LIFELINE ACCESS CENTER
325 S. Euclid Ave, Suite 109
Tucson, AZ 85719

Lifeline Vascular Access

InSync
ARCHITECTURAL DESIGNS, INC.
12B Old Pylesville Road Whiteford, MD 21160
Office 410-452-8006 Fax 410-452-8046

AREA OF WORK
ELEC SERVICE LOCATION
KEYPLAN

0" 1" 2" 3"
1/8"=1'-0" 8' 16' 24'
1/4"=1'-0" 4' 8' 12'

LIGHTING AND DEMOLITION PLANS

REVISIONS		
REV#	DATE	DESCRIPTION
1	6/28/16	PERMIT REVIEW COMMENTS
	1/6/17	ARIZONA STATE ASC PLAN REVIEW

DRAWING NO. E2
SHEET OF 5
DATE 4/13/16 DRAWN BY JCW
JOB NUMBER 11222 CHECKED BY MSW

WDC# 16-25

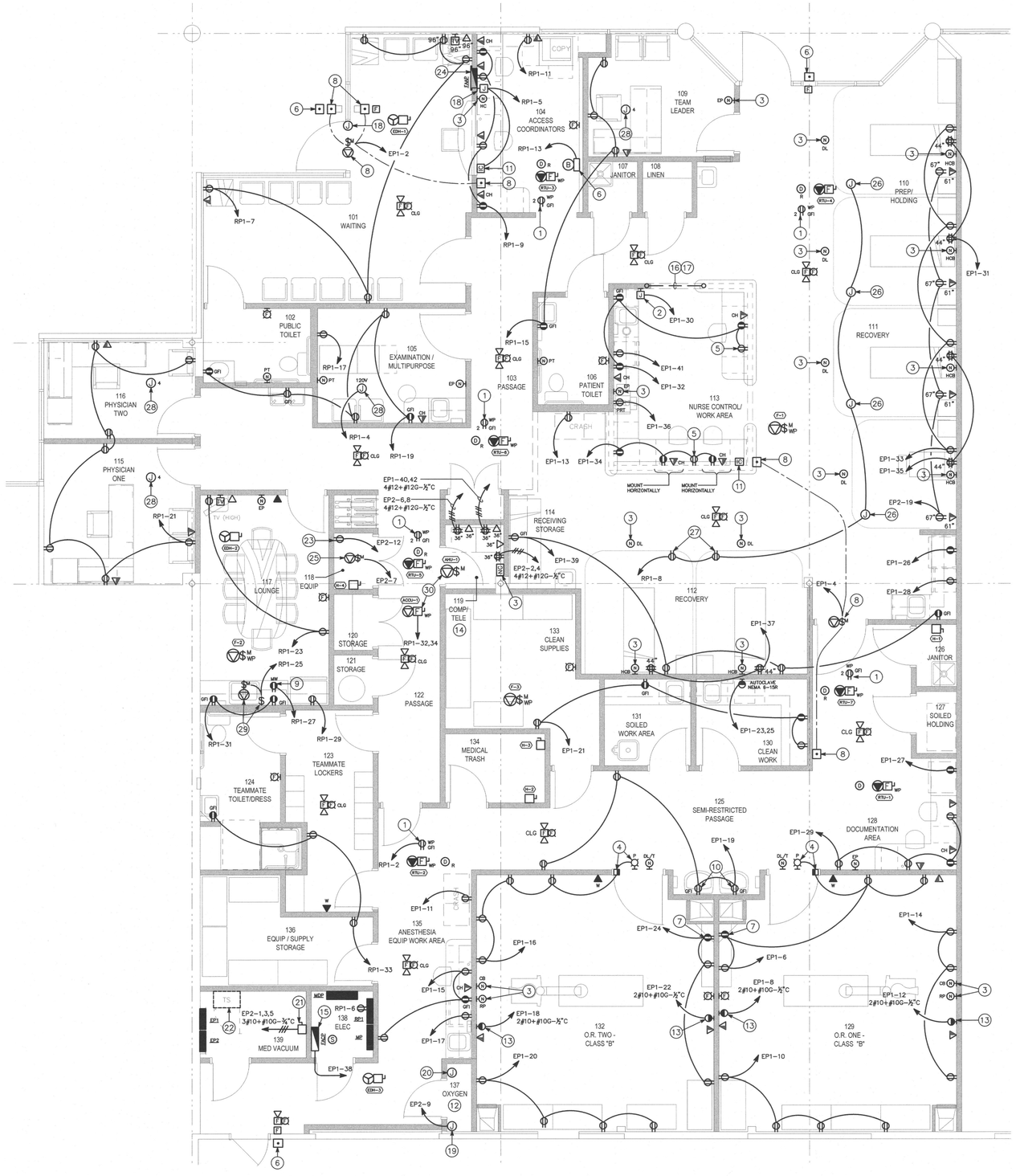

1 / E3 FLOOR PLAN - POWER

SCALE: 1/4"=1'-0"

DRAWING NOTES:

1. PROVIDE RECEPTACLE ON ROOF NEAR ROOF MOUNTED MECHANICAL EQUIPMENT FOR MAINTENANCE USE.
2. PROVIDE A JUNCTION BOX FOR OXYGEN MASTER ALARM PANEL. COORDINATE EXACT ELECTRICAL REQUIREMENTS IN FIELD WITH OXYGEN VENDOR.
3. EXPEDITER NURSE CALL SYSTEM DEVICE LOCATION. CONTRACTOR SHALL FURNISH AND INSTALL COMPLETE NURSE CALL SYSTEM. PROVIDE CONDUIT FROM EACH OUTLET LOCATION TO CEILING SPACE ABOVE. COORDINATE ALL WORK WITH OWNER'S VENDOR, EXPEDITER SYSTEMS (1-800-843-9651). REFER TO SCHEDULE ON SHEET E1. COORDINATE ALL LOCATIONS WITH OWNER. (TYPICAL)
4. MOUNT 'IN-USE' SIGN OVER DOOR AND INTERLOCK WITH DOOR CONTACT SWITCH SO THAT SIGN ENERGIZES WHEN DOOR IS CLOSED. DOOR SWITCH TO BE EDWARDS #503A OR APPROVED EQUAL.
5. MOUNT BELOW COUNTER IN KNEE SPACE. COORDINATE WITH OWNER.
6. HARD WIRED ELECTRONIC DOOR CHIME WITH 3 SEPARATE TONES FOR EACH PUSHBUTTON LOCATION. COORDINATE LOCATION OF PUSHBUTTONS AND DOOR CHIME WITH OWNER AND ARCHITECT. ELECTRICAL CONTRACTOR SHALL FURNISH AND INSTALL ELECTRONIC DOOR CHIME, 16 VOLT TRANSFORMER, PUSHBUTTONS AND ALL WIRING ASSOCIATED WITH DOOR CHIME SYSTEM. NUTONE OR APPROVED EQUAL.
7. PROVIDE A RECEPTACLE AT SHELF FOR RADIO. COORDINATE HEIGHT AND LOCATION OF RECEPTACLE IN FIELD.
8. POWER ASSISTED DOOR AND PUSHBUTTON FURNISHED BY OTHERS AND INSTALLED BY ELECTRICAL CONTRACTOR. PROVIDE OUTLET BOX NEXT TO PADDLE BUTTON IN RECEPTION 110 FOR AUTOMATIC DOOR SWITCH CONTROL. COORDINATE WITH VENDOR SPECIFICATIONS PRIOR TO ROUGH-IN.
9. MOUNT AT MICROWAVE SHELF.
10. PROVIDE GFI RECEPTACLE UNDER SCRUB SINK FOR INFRARED SENSOR BY PLUMBING CONTRACTOR.
11. PROVIDE AND INSTALL HARDWIRED LOW VOLTAGE DOOR INTERCOM SYSTEM. PROVIDE MASTER STATION AT RECEPTION DESK. REFER TO ARCHITECTURAL DRAWINGS FOR LOCATION, ELEVATIONS AND SYSTEM DETAILS. COORDINATE SYSTEM DETAILS WITH LIFELINE PROJECT MANAGER. INTERCOM SYSTEM MAY BE COMBINED WITH DOOR CHIME SYSTEM FOR ONE COMPLETE SYSTEM. USE BRANCH CIRCUIT RP1-16 FOR 120V POWER.
12. ALL ELECTRICAL EQUIPMENT, CONDUIT, WIRE, ETC. IN THIS ROOM SHALL BE INSTALLED PER NEC AND LOCAL BUILDING CODES. FURNISH AND INSTALL ELECTRICAL ITEMS PER NEC AND LOCAL BUILDING CODES.
13. PROVIDE A GREY DEDICATED L5-30R RECEPTACLE FOR TENANT PROVIDED UPS.
14. COORDINATE EXACT LOCATION AND MOUNTING HEIGHT FOR OUTLETS IN COMP/TELE ROOM WITH OWNER AND ARCHITECT PRIOR TO ROUGH-IN OR MOUNTING OF ANY BOXES.
15. FIRE ALARM CONTROL PANEL SHALL BE PERMANENTLY LABELED WITH PANEL DESIGNATION AND CIRCUIT NUMBER PER NFPA 72.
16. PROVIDE 1-1" EMPTY CONDUIT WITH PULL STRING IN SLAB FROM NURSES STATION COUNTER AREA AND TURN UP AT NEAREST WALL TO ACCESSIBLE CEILING SPACE FOR VOICE/DATA CABLES TO THE NURSES STATION COUNTER AREA. SAW CUT AND PATCH EXISTING FLOOR AS REQUIRED. COORDINATE CONDUIT LOCATION WITH ARCHITECT PRIOR TO ROUGH-IN.
17. PROVIDE 1-1" CONDUIT WITH 2#12+1#12G IN SLAB FROM NURSES STATION COUNTER AREA AND TURN UP AT NEAREST WALL TO CEILING SPACE FOR POWER WIRING TO THE NURSES STATION COUNTER AREA. USE BRANCH CIRCUIT AS SHOWN. SAW CUT AND PATCH EXISTING FLOOR AS REQUIRED. COORDINATE CONDUIT LOCATION WITH ARCHITECT PRIOR TO ROUGH-IN.
18. PROVIDE JUNCTION BOX ABOVE DOOR AND AT RECEPTIONS DESK FOR ELECTRIC DOOR SECURITY STRIKE POWER AND CONTROL. PROVIDE 120V POWER TO LOW VOLTAGE TRANSFORMER. REFER TO ARCHITECTURAL DRAWINGS FOR SYSTEM AND ADDITIONAL INFORMATION.
19. OXYGEN CABINET – MOUNT FLUSH IN WALL AND MAKE FINAL CONNECTIONS. REFER TO VENDORS SPECIFICATIONS FOR SIZE OF JUNCTION BOX.
20. PROVIDE A FLUSH MOUNTED JUNCTION BOX WITH ¾" CONDUIT TO CEILING SPACE FOR LOW VOLTAGE OXYGEN EQUIPMENT WIRING. EXTEND TO NURSE STATION COORDINATE LOCATION AND ROUTING IN FIELD WITH VENDOR PRIOR TO ROUGH-IN.
21. VACUUM PUMP – 2 @ 2HP, 208V, 3Ø. PROVIDE A 3P30A NON FUSED SAFETY SWITCH FOR VACUUM PUMP. COORDINATE LOCATION AND ALL ELECTRICAL REQUIREMENTS WITH EQUIPMENT VENDOR AND MANUFACTURER PRIOR TO ROUGH-IN.
22. APPROXIMATE LOCATION OF FUTURE AUTOMATIC TRANSFER SWITCH. PROVIDE CONDUITS AND TERMINATE ABOVE CEILING AS SHOWN ON RISER WITH PULL STRING FOR FUTURE GENERATOR. EXTEND CONDUITS TO EXTERIOR OF BUILDING AT LOCATION DETERMINED BY RMS LIFELINE PROJECT MANAGER. SEE RISER DIAGRAM ON DWG E3 FOR ADDITIONAL INFORMATION. COORDINATE EXACT LOCATION OF AUTOMATIC TRANSFER SWITCH PRIOR TO ROUGH-IN.
23. FURNISH AND INSTALL RECEPTACLE FOR GAS FIRED TANKLESS WATER HEATER. COORDINATE LOCATION AND POWER REQUIREMENTS WITH PLUMBING CONTRACTOR PRIOR TO ROUGH-IN.
24. COORDINATE LOCATION AND MOUNTING REQUIREMENTS WITH FIRE MARSHALL FOR APPROVED FIRE ALARM ANNUNCIATOR PANEL (FAAP) LOCATION PRIOR TO ROUGH-IN.
25. RE-CIRCULATION PUMP BY MECHANICAL CONTRACTOR – 1/8HP, 120/1Ø. COORDINATE ELECTRICAL REQUIREMENTS AND LOCATION WITH CONTRACTOR PRIOR TO ROUGH-IN. ELECTRICAL CONTRACTOR SHALL MAKE ALL ELECTRICAL CONNECTIONS TO PUMP.
26. PROVIDE JUNCTION BOX ABOVE CEILING FOR FUTURE TV POWER. LABEL OUTLET BOX WITH "CIRCUIT NUMBER AND FUTURE TV POWER" FOR EASY IDENTIFICATION. COORDINATE EXACT LOCATION WITH TENANT.
27. RECEPTACLE FLUSH MOUNTED IN CEILING FOR PATIENT TV'S BY OTHERS.
28. PROVIDE 120V POWER ABOVE CEILING TO ELECTRONIC DAMPER BY MECHANICAL.
29. GARBAGE DISPOSAL – 120V. PROVIDE ON/OFF SWITCH MOUNTED AT SAME HEIGHT AS COUNTER RECEPTACLES.
30. AHU-1 (INDOOR) SHALL BE POWERED THROUGH ACCU-1 (OUTDOOR) MFA = 2P15A, MCA = 10A, 208/1Ø. EXTEND 2#12+1#12-3/4"C FROM OUTDOOR UNIT TO INDOOR UNIT. ELECTRICAL CONTRACTOR SHALL COORDINATE THE EXACT ELECTRICAL REQUIREMENTS AND LOCATION WITH THE MECHANICAL CONTRACTOR PRIOR TO ROUGH-IN. INSTALL PER NEC AND MANUFACTURER'S PRINTED INSTRUCTIONS.

ISSUED FOR ARIZONA
STATE ASC PLAN REVIEW

dpce consulting engineer
don penn
635 Westport Parkway
Suite 300
Grapevine, Texas 76051
Phone: 817-410-2858
Fax: 817-251-8411

TENANT RENOVATIONS FOR:
LIFELINE
ACCESS CENTER
325 S. Euclid Ave, Suite 109
Tucson, AZ 85719

Lifeline Vascular Access

InSync
ARCHITECTURAL DESIGNS, INC.
1213 Old Pylesville Road Whiteford, MD 21160
Office 410-452-8006 Fax 410-452-8046

AREA OF WORK
ELEC SERVICE LOCATION
KEYPLAN

0" 1" 2" 3"
1/8"=1'-0" 8' 16' 24'
1/4"=1'-0" 4' 8' 12'

POWER PLAN

REVISIONS		
REV#	DATE	DESCRIPTION
1	6/29/16	PERMIT REVIEW COMMENTS
	1/6/17	ARIZONA STATE ASC PLAN REVIEW

DRAWING NO. E3
SHEET OF 5
DATE 4/15/16 DRAWN BY JCW
JOB NUMBER 11222 CHECKED BY MSW
WDO# 16-25

MECHANICAL EQUIPMENT CONNECTION SCHEDULE

EQUIP #	LOCATION	TONS	LOAD HP/KW/W	LOAD FLA/MCA	VOLTAGE	PHASE	DISCONNECT @ UNIT NFSS	DISCONNECT @ UNIT FSS	BRANCH CIRCUIT BRKR	BRANCH CIRCUIT CIRCUIT #	BRANCH CIRCUIT WIRE	NOTES
RTU #1	ROOF	5	-	35 MCA	208	3	-	3P35A	3P35A	EP2-13,15,17	3#8#10G-3/4"C	1,4,5,6
RTU #2	ROOF	5	-	35 MCA	208	3	-	3P35A	3P35A	EP2-14,16,18	3#8#10G-3/4"C	1,4,5,6
RTU #3	ROOF	4	-	28.6 MCA	208	3	-	3P40A	3P40A	MP-1,3,5	3#8#10G-3/4"C	1,4,5,6
RTU #4	ROOF	4	-	30.8 MCA	208	3	-	3P40A	3P40A	MP-2,4,6	3#8#10G-3/4"C	1,4,5,6
RTU #5	ROOF	4	-	28.6 MCA	208	3	-	3P40A	3P40A	MP-7,9,11	3#8#10G-3/4"C	1,4,5,6
RTU #6	ROOF	3	-	29.6 MCA	208	3		3P40A	3P40A	MP-8,10,12	3#8#10G-3/4"C	1,4,5,6
RTU #7	ROOF	4	-	28.6 MCA	208	3		3P40A	3P40A	MP-13,15,17	3#8#10G-3/4"C	1,4,5,6
F-1	ROOF	-	.167 HP	-	120	1	-	-	1P15A	RP1-10	2#12+#12G-1/2"C	1,2,5,10
F-2	ROOF	-	.167 HP	-	120	1	-	-	1P15A	EP-11	2#12+#12G-1/2"C	1,2,5,10
F-3	ROOF	-	.167 HP	-	120	1	-	-	1P15A	EP2-10	2#12+#12G-1/2"C	1,2,5,9,11
AHU-1 / ACCU-1	TELE / COMP	-	-	10 MCA	208	1	-	2P15A	2P15A	RP1-32,34	2#12+#12G-1/2"C	1,4
EDH-1	WAITING	-	3.0 KW	-	208	1	2P30A	-	2P20A	RP1-16,18	2#12+#12G-1/2"C	1,4
EDH-2	LOUNGE	-	2.0 KW	-	120	1	1P30A	-	1P25A	RP1-14	2#10+#10G-1/2"C	1,4
EDH-3	BACK ENTRANCE	-	1.0 KW	-	120	1	1P30A	-	1P20A	RP1-12	2#12+#12G-1/2"C	1,4
H-1	RTU-1	-	3.3 KW	-	208	3	3P30A	-	3P15A	RP1-20,22,24	3#12+#12G-1/2"C	1,3
H-2	RTU-2	-	3.3 KW	-	208	3	3P30A	-	3P15A	RP1-26,28,30	3#12+#12G-1/2"C	1,3
H-3	RTU-3	-	3.3 KW	-	208	3	3P30A	-	3P15A	MP-14,16,18	3#12+#12G-1/2"C	1,3
H-4	RTU-4	-	3.3 KW	-	208	3	3P30A	-	3P15A	MP-19,21,23	3#12+#12G-1/2"C	1,3
H-5	RTU-5	-	3.3 KW		208	3	3P30A		3P15A	MP-20,22,24	3#12+#12G-1/2"C	1,3
H-6	RTU-6	-	3.3 KW		208	3	3P30A		3P15A	MP-25,27,29	3#12+#12G-1/2"C	1,3

NOTES:
1. COORDINATE ALL EQUIPMENT LOCATIONS, CONNECTIONS AND ELECTRICAL REQUIREMENTS WITH MECHANICAL CONTRACTOR AND LABEL/ NAMEPLATE OF EQUIPMENT PRIOR TO ROUGH-IN.
2. PROVIDE THERMAL MOTOR SNAP SWITCH, NEMA 3R WHERE LOCATED OUTSIDE; COORDINATE WITH MECHANICAL.
3. PROVIDE DISCONNECT SWITCH, NEMA 3R WHERE LOCATED OUTSIDE.
4. PROVIDE DISCONNECT SWITCH, FUSED PER MANUFACTURER'S RECOMMNENDATION, NEMA 3R WHERE LOCATED OUTSIDE.
5. EQUIPMENT MOUNTED ON ROOF.
6. USE FUSE SIZE OR "HACR" CIRCUIT BREAKER PER MANUFACTURES UL LISTING.
7. ELECTRICAL CONTRACTOR TO PROVIDE A GFCI/WP RECEPTACLE WITH 25' OF ALL ROOF MOUNTED EQUIPMENT FOR MAINTENANCE USE.
8. CONTROL VIA REVERSE ACTING THERMOSTAT PROVIDED BY MECHANICAL; ELECTRICAL CONTRACTOR PROVIDE WIRING.
9. 24/7 OPERATION - COORDINATE WITH MECHANICAL CONTRACTOR.
10. CONTROL OF MECHANICAL EQUIPMENT SHALL BE INTERLOCKED WITH ROOFTOP UNIT. REFER TO MECHANICAL DRAWINGS.
11. SHARES BRANCH CIRCUIT.

FAULT CURRENT CALCULATIONS

BASED ON POINT-TO-POINT METHOD

X1 - Utility XFMR to Terminal Cabinet

Fault Current - Service Line terminals	63,100	Amperes
Number of Parallel Feeder Conductor Runs	3	Run(s)
Feeder Length from Service Equipment	160	Feet
Wire Size and C** 600 KCMIL AL	23,451	*
Fault Current at Terminal Cabinet	28,748	Amperes

**C = Constant

X2 - Terminal Cabinet to Service Disconnect

Fault Current - Service Line terminals	28,748	Amperes
Number of Parallel Feeder Conductor Runs	2	Run(s)
Feeder Length from Service Equipment	50	Feet
Wire Size and C** 500 KCMIL AL	21,391	*
Fault Current at Disconnect	22,463	Amperes

**C = Constant

X3 - Service Disconnect to PANEL MDP

Fault Current - Service Line terminals	22,463	Amperes
Number of Parallel Feeder Conductor Runs	2	Run(s)
Feeder Length from Service Equipment	160	Feet
Wire Size and C** 350 KCMIL Cu	19,704	*
Fault Current at Panel MDP	12,767	Amperes

**C = Constant

X4 - PANEL MDP to PANEL RP1

Fault Current - Service Line terminals	12,767	Amperes
Number of Parallel Feeder Conductor Runs	1	Run(s)
Feeder Length from Service Equipment	10	Feet
Wire Size and C** 1/0 Cu	8,925	*
Fault Current at Panel RP1	11,408	Amperes

**C = Constant

X5 - PANEL MDP to PANEL MP

Fault Current - Service Line terminals	12,767	Amperes
Number of Parallel Feeder Conductor Runs	1	Run(s)
Feeder Length from Service Equipment	15	Feet
Wire Size and C** 4/0 Cu	15,082	*
Fault Current at Panel MP	11,593	Amperes

**C = Constant

X6 - PANEL MDP to PANEL EP1

Fault Current - Service Line terminals	12,767	Amperes
Number of Parallel Feeder Conductor Runs	1	Run(s)
Feeder Length from Service Equipment	20	Feet
Wire Size and C** 4/0 Cu	15,082	*
Fault Current at Panel EP1	11,190	Amperes

**C = Constant

PANEL MDP

208 / 120 VOLTS 3 PHASE 4 WIRE
600 AMP MAIN LUGS ONLY
A.I.C. = 42,000
SURFACE MOUNTED ENCLOSURE

CKT No.	DESCRIPTION	KVA	C/B POLE	C/B AMP	CKT No.	A	B	C	CKT No.	C/B POLE	C/B AMP	KVA	DESCRIPTION	CKT No.
1					1	•			2					2
3	PANEL RP1	29.0	3	125	3		•		4	3	225	60.7	PANEL MP	4
5					5			•	6					6
7					7	•			8					8
9	PANEL EP1 & EP2	64.7	3	225	9		•		10	3	100	-	PROVISION	10
11					11			•	12					12
		93.7	KVA									60.7	KVA	

CONNECTED LOADS	KVA		AMPS
PANEL MDP	154.4	/	429
		/	
TOTALS	154.4	/	429

NOTES:

PANEL EP1

208 / 120 VOLTS 3 PHASE 4 WIRE
225 AMP MAIN LUGS ONLY
A.I.C. = 42,000
SURFACE MOUNTED ENCLOSURE

CKT No.	DESCRIPTION	KVA	C/B POLE	C/B AMP	CKT No.	A	B	C	CKT No.	C/B POLE	C/B AMP	KVA	DESCRIPTION	CKT No.	
1	PROCEDURE RM 1 OH LIGHT	1.2	1	20	1	•			2	1	20	1.0	POWER ASSISTED DOOR	2	
3	PROCEDURE RM 2 OH LIGHT	1.2	1	20	3		•		4	1	20	1.0	POWER ASSISTED DOOR	4	
5	PROCEDURE RM 1 LIGHTING	0.9	1	20	5			•	6	1	20	0.8	PROCEDURE RM 1 RECEPTS	6	
7	PROCEDURE RM 2 LIGHTING	0.9	1	20	7	•			8	1	30	1.5	PROCEDURE RM 1 UPS	8	
9	WORK/PREP/SOILED LIGHTING	1.5	1	20	9		•		10	1	20	0.8	PROCEDURE RM 1 RECEPTS	10	
11	CRASH CART	0.8	1	20	11			•	12	1	30	1.5	PROCEDURE RM 1 UPS	12	
13	CRASH CART	0.8	1	20	13	•			14	1	20	0.6	PROCEDURE RM 1 RECEPTS	14	
15	ANESTHESIA WORK RECEPTS	0.6	1	20	15		•		16	1	20	0.8	PROCEDURE RM 2 RECEPTS	16	
17	ANESTHESIA REFRIG	0.8	1	20	17			•	18	1	30	1.5	PROCEDURE RM 2 UPS	18	
19	RESTRICTED PASSAGE RECPTS	0.8	1	20	19	•			20	1	20	0.8	PROCEDURE RM 2 RECEPTS	20	
21	CLEAN RM RECEPTS	0.8	1	20	21		•		22	1	30	1.5	PROCEDURE RM 2 UPS	22	
23	AUTOCLAVE	2.0	2	15	23			•	24	1	20	0.6	PROCEDURE RM 2 RECEPTS	24	
25					25	•			26	1	20	1.2	RECOVERY BLANKET WARMER	26	
27	BLANKET WARMER	1.2	1	20	27		•		28	1	20	0.6	RECOVERY REFRIGERATOR	28	
29	DOCUMENTATION AREA RECPTS	0.8	1	20	29			•	30	1	20	0.2	OXYGEN MONITOR	30	
31	RECOVERY RECEPTS	0.8	1	20	31	•			32	1	20	0.8	NURSE WORK RECEPTS	32	
33	RECOVERY RECEPTS	0.8	1	20	33		•		34	1	20	0.8	NURSE WORK RECEPTS	34	
35	RECOVERY RECEPTS	0.8	1	20	35			•	36	1	20	0.6	NURSE WORK PRINTER	36	
37	RECOVERY RECEPTS	0.8	1	20	37	•			38	1	20	0.2	FIRE ALARM CONTROL PANEL	38	LC/RM
39	RECOVERY RECEPTS	0.8	1	20	39		•		40	1	20	0.2	COMP/TELE RECEPT	40	
41	NURSE WORK RECEPTS	0.6	1	20	41			•	42	1	20	0.2	COMP/TELE RECEPT	42	
		18.9	KVA									17.2	KVA		

CONNECTED LOADS	KVA		AMPS
PANEL EP1	36.1	/	100
SUB PANEL EP2 TOTAL	28.6	/	79
TOTALS	64.7	/	180

NOTES:
LC/RM = PROVIDE LOCK CLIP AND RED MARK ON BREAKER

PANEL EP2

208 / 120 VOLTS 3 PHASE 4 WIRE
225 AMP MAIN LUGS ONLY
A.I.C. = 42,000
SURFACE MOUNTED ENCLOSURE

CKT No.	DESCRIPTION	KVA	C/B POLE	C/B AMP	CKT No.	A	B	C	CKT No.	C/B POLE	C/B AMP	KVA	DESCRIPTION	CKT No.
1					1	•			2	1	20	0.2	COMP/TELE RECEPT	2
3	VACUUM PUMP	5.6	3	30	3		•		4	1	20	0.2	COMP/TELE RECEPT	4
5					5			•	6	1	20	0.2	COMP/TELE RECEPT	6
7	RECIRC PUMP (WATER HEATER)	0.2	1	15	7	•			8	1	20	0.2	COMP/TELE RECEPT	8
9	OXYGEN CABINET	0.2	1	20	9		•		10	1	15	0.4	F - 4 & F - 3	10
11	EF #1	0.2	1	15	11			•	12	1	20	0.2	TANKLESS WATER HEATER	12
13					13	•			14					14
15	RTU #1	10.1	3	35	15		•		16	3	35	10.1	RTU #2	16
17					17			•	18					18
19	RECOVERY RECEPTS	0.8	1	20	19	•			20	1	20	-	SPARE	20
21	SPARE	-	1	20	21		•		22	1	20	-	SPARE	22
23	SPACE	-	-	-	23			•	24	-	-	-	SPACE	24
		17.1	KVA									11.5	KVA	

CONNECTED LOADS	KVA		AMPS
PANEL EP2	28.6	/	79
		/	
TOTALS	28.6	/	79

NOTES:

PANEL RP1

208 / 120 VOLTS 3 PHASE 4 WIRE
125 AMP MAIN LUGS ONLY
A.I.C. = 42,000
SURFACE MOUNTED ENCLOSURE

CKT No.	DESCRIPTION	KVA	C/B POLE	C/B AMP	CKT No.	A	B	C	CKT No.	C/B POLE	C/B AMP	KVA	DESCRIPTION	CKT No.
1	SIGN - EXTERIOR	1.2	1	20	1	•			2	1	20	1.0	ROOF MAINTENANCE RECEPTS	2
3	WAITING/OFFICE LIGHTING	1.5	1	20	3		•		4	1	20	0.4	ELECTRONIC BOXES	4
5	DOOR STRIKE	0.2	1	20	5			•	6	1	20	0.2	RECEPTACLE AT PANEL	6
7	WAITING ROOM RECEPTS	1.0	1	20	7	•			8	1	20	1.2	PATIENT TV RECEPTS	8
9	COORDINATOR RECEPTS	0.8	1	20	9		•		10	1	15	0.2	F - 1	10
11	COPIER	1.2	1	20	11			•	12	1	20	1.0	EDH - 3	12
13	DOOR BELL SYSTEM	0.3	1	20	13	•			14	1	25	2.0	EDH - 2	14
15	TM LEADER/PATIENT RR RCPTS	0.8	1	20	15		•		16	2	20	3.0	EDH - 1	16
17	ULTRA SOUND RECEPT	0.2	1	20	17			•	18					18
19	ULTRA SOUND RECEPTS	0.8	1	20	19	•			20					20
21	PHYSICIAN RECEPTS	1.4	1	20	21		•		22	3	15	3.3	H - 1	22
23	LOUNGE RECEPT	0.2	1	20	23			•	24					24
25	GARBAGE DISPOSAL	1.0	1	20	25	•			26					26
27	MICROWAVE	1.0	1	20	27		•		28	3	15	3.3	H - 2	28
29	LOUNGE REFRIG	0.8	1	20	29			•	30					30
31	LOUNGE COUNTER RECEPTS	0.4	1	20	31	•			32	2	15	2.0	AHU-1 / ACCU-1	32
33	EQUIP/TOILET RECEPTS	0.6	1	20	33		•		34					34
35	SPARE	-	1	20	35			•	36	-	-	-	SPACE	36
37	SPARE	-	1	20	37	•			38	-	-	-	SPACE	38
39	SPARE	-	1	20	39		•		40	-	-	-	SPACE	40
41	SPARE	-	1	20	41			•	42	-	-	-	SPACE	42
		13.4	KVA									17.6	KVA	

CONNECTED LOADS	KVA		AMPS
PANEL RP1	31.0	/	86
		/	
TOTALS	31.0	/	86

NOTES:

PANEL MP

208 / 120 VOLTS 3 PHASE 4 WIRE
225 AMP MAIN LUGS ONLY
A.I.C. = 42,000
SURFACE MOUNTED ENCLOSURE

CKT No.	DESCRIPTION	KVA	C/B POLE	C/B AMP	CKT No.	A	B	C	CKT No.	C/B POLE	C/B AMP	KVA	DESCRIPTION	CKT No.
1					1	•			2					2
3	RTU #3	9.3	3	40	3		•		4	3	40	10.0	RTU #4	4
5					5			•	6					6
7					7	•			8					8
9	RTU #5	9.3	3	40	9		•		10	3	40	9.6	RTU #6	10
11					11			•	12					12
13					13	•			14					14
15	RTU #7	9.3	3	40	15		•		16	3	15	3.3	H - 3	16
17					17			•	18					18
19					19	•			20					20
21	H - 4	3.3	3	15	21		•		22	3	15	3.3	H - 5	22
23					23			•	24					24
25					25	•			26	1	20	-	SPARE	26
27	H - 6	3.3	3	15	27		•		28	1	20	-	SPARE	28
29					29			•	30	-	-	-	SPACE	30
		34.5	KVA									26.2	KVA	

CONNECTED LOADS	KVA		AMPS
PANEL MP	60.7	/	168
		/	
TOTALS	60.7	/	168

NOTES:

LOAD CALCULATION SUMMARY

LOAD TYPE	CONNECTED KVA	DEMAND FACTOR	COMPUTED KVA
* LIGHTING	11.0	125%	13.7
SIGN CIRCUIT	1.2	125%	1.5
** RECEPTACLES	39.5	**	24.8
ROOFTOP UNITS (A/C)	57.6	100%	57.6
WATER HEATERS	0.2	100%	0.2
ELECTRIC HEATING	25.8	100%	25.8
MISCELLANEOUS LOAD	22.9	100%	22.9
10% FUTURE	15.8	100%	15.8
TOTAL KVA	174.0 KVA		162.3 KVA
TOTAL AMPS	483 AMPS		450 AMPS

* PER NEC 210-20(a) AND TABLE 220-12
HEALTH CARE 2 w/s.f. 11.0 KVA
WAREHOUSE 1/4 w/s.f. KVA

** PER NEC 220-13
1st 10KW @ 100% BALANCE @ 50% = 24.8 KVA

TOTAL TENANT AREA 5,485 s.f.

MAIN SERVICE VOLTAGE 208/ 120 Volts 3 Phase 4 Wire
TENANT SERVICE SIZE 600 Amp

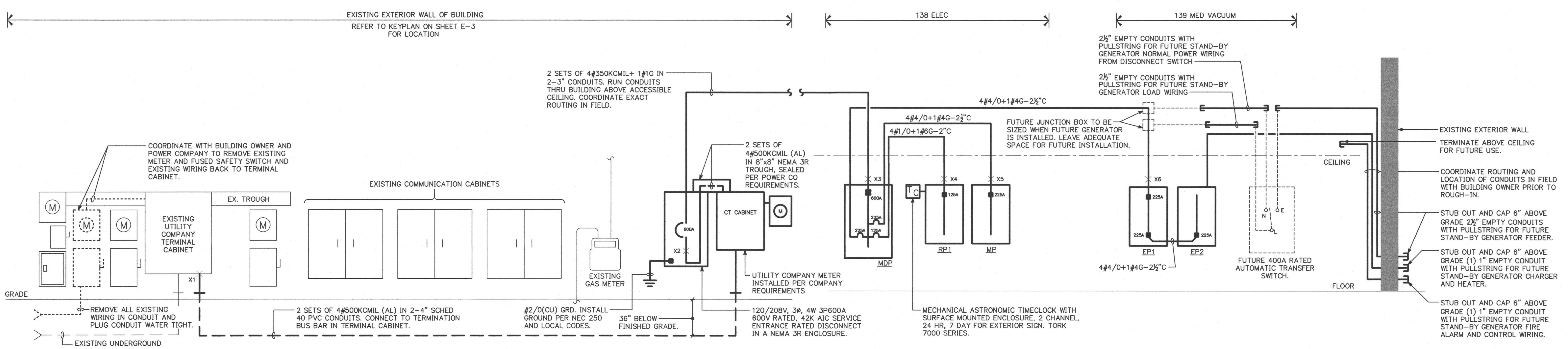

POWER RISER DIAGRAM

NO SCALE

NOTES: EXISTING WORK IS SHOWN LIGHT, NEW IS SHOWN DARK (BOLD) AND FUTURE WORK IS SHOWN LIGHT AND DASHED.
ALL CONDUCTORS ARE COPPER UNLESS NOTED OTHERWISE.

ISSUED FOR ARIZONA STATE ASC PLAN REVIEW

Expires 6/30/18

dpce
don penn ■ consulting engineer
635 Westport Parkway
Suite 300
Grapevine, Texas 76051
Phone: 817-410-2858
Fax: 817-251-8411

TENANT RENOVATIONS FOR:
LIFELINE ACCESS CENTER
325 S. Euclid Ave, Suite 109
Tucson, AZ 85719

Lifeline Vascular Access

InSync ARCHITECTURAL DESIGNS, INC.
1213 Old Pylesville Road Whiteford, MD 21160
Office 410-452-8006 Fax 410-452-8046

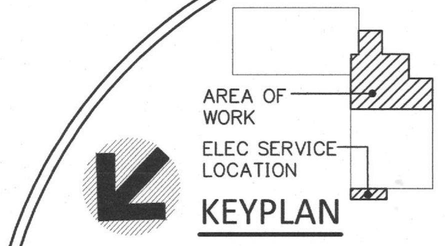

KEYPLAN

0" 1" 2" 3"
1/8"=1'-0" 8' 16' 24'
1/4"=1'-0" 4' 8' 12'

POWER RISER DIAGRAM AND SCHEDULES

REVISIONS		
REV#	DATE	DESCRIPTION
1	6/29/16	PERMIT REVIEW COMMENTS
	1/6/17	ARIZONA STATE ASC PLAN REVIEW

DRAWING NO. E4
SHEET OF 5
DATE 4/13/16 DRAWN BY JCW
JOB NUMBER 11222 CHECKED BY MSW

WDC# 16-25

ELECTRICAL SPECIFICATIONS

GENERAL ELECTRICAL REQUIREMENTS

1.1 Requirements:
A. The work covered by this Section of the specification includes furnishing of all labor, equipment, supplies and materials and performing all operations including excavation and backfilling, cutting, channeling and chasing necessary for the installation of wiring systems, as shown on the drawings, as hereinafter specified, and as directed by the Engineer.

B. The Contractor shall perform all work hereunder in strict accordance with the rules and regulations of all applicable municipal, state and other local codes, and in accordance with applicable provisions of the latest adopted edition of the National Electrical Code.

C. The Contractor shall make application for all necessary permits, licenses and inspections as required under the above codes and shall pay all fees and charges appurtenant thereto.

D. The electrical contractor shall make application for electrical service with the local electrical utility and forward anticipated electrical loads for the project. In addition, the electrical contractor shall be responsible for coordinating the installation of the permanent electrical service with the utility company to assure completion at the earliest possible date so as not to delay the project.

E. The general arrangement of conduit, wiring and equipment shall be as shown on the contract drawings. The Contractor shall carefully examine all contract drawings and shall be responsible for the proper fitting of materials and equipment in each location as indicated, without substantial alteration. In as much as the drawings are generally diagrammatic and due to the small scale of the drawings, it is not possible to indicate all offsets, fittings and accessories, as may be required. The Contractor shall carefully investigate the site, structural, and finish conditions affecting his work and shall arrange such work accordingly, furnishing such fitting and accessories as may be required to meet such conditions, at no additional cost to the Owner. The right to make any reasonable change in location of apparatus, equipment, outlets or routing of conduit and wiring, up to the time of roughing–in is reserved by the Engineer without involving any additional expense to the Owner.

1.2 Materials:
A. All materials shall be new and the best of their respective kinds, suitable for the conditions and duties imposed on them after installation. All such material shall be as found in the approved list of the National Board of Fire Underwriters. All equipment and systems shall be UL approved.

B. Where material or equipment is identified by proprietary name, model number and/or manufacturer, furnish the named item or equal thereof, subject to acceptance by the Engineer. Substituted items shall be equal or better in quality and performance and must be suitable for the available space, required arrangement and application. Submit any and all data necessary to determine the suitability of substituted items. The suitability of only the named item has been verified. Where more than one item is named, only the first item has been verified as suitable.

1.3 Examination of Premises:
A. The Contractor shall visit the site and observe the conditions under which the work shall be done or other circumstances which will affect the contemplated work. No allowance will be made subsequently in this connection for any error or negligence in the Contractor's part.

1.4 Shop Drawings:
A. The Contractor shall prepare and submit detailed shop drawings. In general, catalog cuts, specification sheets, descriptive data, etc., shall be acceptable for submittal of all equipment specified by standard catalog numbers, unless directed otherwise by the Engineer.

1.5 Low Voltage Testing:
A. The Contractor shall furnish all labor, materials, instruments, fuel and power required to perform all necessary tests. All tests shall be performed to the satisfaction of the Engineer. All defective materials and/or workmanship discovered as a result of these tests, shall be removed and replaced at the Contractor's expense and the test repeated.

B. A thorough test shall be made to demonstrate that the system is entirely free from ground faults, short circuits, and open circuits; that the resistance to ground all non–grounded circuits, before and after connection of equipment meets the requirements of the National Electrical Code.

1.6 Identification:
A. Mark and permanently identify all motor starters, switches, controls, panelboards and other equipment in accordance with the project nomenclature. Identification plates shall be laminated plastic, black and white engraved letters. Lettering for panels and other equipment shall be 3/8" high. Attach identification plates by permanent means.

B. No embossed plastic tape markers or hand written marker pens will be permitted for use in marking equipment.

1.7 Guarantee:
A. The material and workmanship of all parts of the electrical installation specified herein shall be guaranteed unconditionally for a period of one (1) year from date of acceptance against mechanical and electrical defects arising from faulty materials or workmanship. Either replacement or repairs shall be made promptly on any defective materials or workmanship without charge during that period.

1.8 Record Drawings:
A. Upon completion of the electrical installation, the Contractor shall deliver to the Owner one (1) set of prints of electrical contract drawings which shall be legibly marked in red pencil to show all additions, changes and departures of the installation as compared with the original design. They shall be suitable for use in preparation of Record Drawings.

1.9 Record and Information Manual:
A. The Contractor shall have prepared three (3) copies of the Record and Information Manual and deliver three copies of the booklet to the Owner. The manuals shall include copies of all specifications, shop drawings and maintenance instructions for all electrical equipment provided.

1.10 Cutting and Patching:
A. All cutting and patching necessary for the installation of the electrical work shall be done by the electrical contractor. Any damage done to the work already in place by reason of this work shall be repaired at the Contractor's expense. Patching shall be uniform in appearance and shall match with the surrounding surface.

1.11 Mounting Heights:
A. The following mounting heights of the various electrical outlets and devices are for guidance, the Contractor shall study the Architectural and Electrical Drawings for exact locations coordinated with door swings, glass partitions, etc.

Switches & Pull Stations .... 48" to center of outlet box above floor.

Receptacles .... 18" to center of outlet box above floor (unless otherwise noted).

Voice/Data Outlets .... 18" to center of outlet box above floor (unless otherwise noted).

Fire Alarm Horns/Flashing lights.... 80" min to 84" max to top of device or 6" below ceiling.

EXCEPTIONS: CODED VIOLATION, AS NOTED OR DIRECTED.

1.12 Motor Connections and Control Wiring:
A. Provide all power wiring and connections from source to starter, starter to disconnect, and disconnect to motor or device, except where such wiring is provided by equipment manufacturer. All automatic temperature control wiring shall be furnished and installed under Division 15 – Mechanical, unless indicated or specified otherwise. However, Electrical Contractor shall provide and install all starters and make all power connections. Manual control switches shall be furnished and/or installed by the Electrical Contractor as indicated.

B. Furnish and install a disconnect for each motor. Disconnects shall be fused or unfused safety switches as required.

1.13 Connections and Alterations To Existing Work:
A. Any electrical work which will interfere with the normal use of the building in any manner shall be done at such times as mutually agreed upon between the Contractor and the Owner's representative.

B. All existing electrical systems in occupied areas shall be kept in operation during the progress of the work. Temporary electrical connections shall be provided to all systems and equipment where necessary to maintain continuous operation until the new systems and equipment are ready for operation.

C. When existing electrical work is removed, all conduit, ducts, wiring and appurtenances shall be removed to a point below the finished floors or behind finished walls and capped. Such points shall be far enough behind finished surfaces to allow for the installation of the normal thickness of finish material.

D. When the work specified herein connects to any existing conduit, wiring or other equipment, the Contractor shall perform all necessary alterations, cutting and fitting of the existing work as may be necessary or required to make satisfactory connections between the new and existing work and shall leave the completed work in a finished and workmanlike condition, to the entire satisfaction of the Engineer.

E. When the work specified herein or under other divisions of this contract necessitates relocation of existing conduit, wiring or electrical equipment, the Contractor shall perform all work and make all necessary changes to existing work as may be required to leave the completed work in a finished and workmanlike condition to the entire satisfaction of the Engineer.

F. All existing electrical materials not reused under this division and not salvaged by the Owner shall become the property of the Contractor and shall be disposed of in a proper manner off the project site.

G. Removal of existing equipment and feeder renovations shall be closely coordinated with the Owner's representative where they impact critical areas. Interruption of electrical service to critical equipment shall be kept to a minimum and performed on off hours as designated by the Owner's representative.

1.14 Electrical Demolition:
A. In areas indicated to be renovated, remove that portion of the existing electrical installation to complete the new work and all equipment, wiring, conduits and appurtenances not required in the completed installation. All unused conduit and wiring exposed after demolition shall be removed back to the point of concealment.

B. Where electrical systems pass through the renovated areas to serve other portions of the facility, they shall be suitably relocated and the system restored to normal operation.

C. The extent of electrical demolition and relocation is not specifically indicated on the drawings. The contractor shall visit the site prior to submitting his bid to thoroughly review the existing installations and the proposed construction to include the full scope of electrical demolition and relocation. The contractor shall review all areas of the proposed renovation and the required removal and relocation of existing electrical work. In addition, the contractor shall review in detail, the architectural drawings for areas of demolition and removal of existing construction and review in detail, the associated existing electrical installations at the site. This review shall include all necessary costs in the bid to make the necessary adjustments to the existing electrical work to meet the proposed building construction. No allowances or change orders will be made after the bid for insufficient review and/or cost for the electrical demolition.

BASIC ELECTRICAL MATERIALS AND METHODS

1.1 Conduits and Fittings:
A. General:
1) Install all wiring in conduit (except where noted under Wire and Cable) and provide empty conduit for special systems described elsewhere.

2) Minimum conduit size shall be 1/2". All conduit embedded in concrete shall be 3/4" minimum. All exterior underground conduit shall be 1" minimum.

3) In finished areas, install all conduit concealed unless otherwise indicated. Where conduit cannot be concealed utilized surface metal raceway as manufactured by Wiremold. All surface metal raceway shall be run inconspicuously and painted to match adjacent wall/ceiling finishes. Conduit may be run exposed on unfinished walls, in mechanical equipment spaces and elsewhere as indicated.

4) Support all conduit not embedded in concrete or masonry so that strain is not transmitted to outlet boxes and pull boxes, etc. Supports to be sufficiently rigid to prevent distortion of conduits during wire pulling.

B. Conduit:
1) Provide hot–dip galvanized, rigid steel conduit for work exposed to weather and for embedded work in concrete or masonry and in or below the concrete slab on grade (above the vapor barrier).

2) Provide galvanized, (inside and out) electrical metallic tubing (EMT) for interior exposed work, for concealed work above suspended ceilings and within interior partitions or non–masonry walls.

3) Provide polyvinylchloride (PVC) schedule 40 conduit for exterior underground direct burial and exterior underground concrete encased installation.

C. Supports:
1) All parts and hardware used for support of equipment, conduits and fittings, shall be galvanized.

2) Support single runs of suspended feeder conduit with adjustable hangers using threaded rods attached to the structure above.

3) Support groups of suspended conduits run in parallel on trapeze hangers constructed of "Kindorf" channels and conduit straps suspended with threaded hanger rods attached to the structure above. No tie wires or building wire shall be used for strapping conduits.

4) Support surface runs of conduit using one hold pipe straps or two hold pipe straps. Strap spacing maximum 6 ft. on centers.

5) Fasten pipe straps and hangers to concrete using inserts or expansion bolts and to hollow masonry using toggle bolts. Wooden plugs and shields will not be permitted. All supports in bar joist construction shall be attached to the top cord of the joists using suitable clamps approved for the purpose.

6) Support conduits from joists and beams using clamps and/or Caddy clips approved for the purpose.

1.2 Wire and Cable (600 Volt):
A. Building wire, unless otherwise indicated, shall be 600 volt, type THHN/THWN–2 insulation for interior use and exterior use within conduit. Conductors shall be sized and run as indicated. Conductors shall be soft drawn copper of not less than 98% conductivity. Branch circuits (rated 60 amperes or less), installed above ceilings and within walls, where permitted by code, may be type MC cable (with ground wire). No Romex or BX cable is permitted.

B. No wire smaller than number twelve (12) AWG shall be used unless otherwise indicated. The wire size indicated in the homerun shall be used throughout the circuit. Conductors shall be continuous from outlet to outlet and from terminal board to point of final connection, and no splice shall be made except within outlet or junction boxes. All conductors shall be of the sizes as indicated. All wires number eight (8) AWG and larger shall be stranded. The Contractor shall make wiring connections of all electrical equipment requiring electric service. Wires and cables shall be as manufactured by Plastic Wire & Cable Corporation, Okonite Company, General Electrical or equivalent.

C. A color coding system, as listed below, shall be used for throughout the building's network of feeders and circuits and used as a basis of balancing the load. Selection shall be based on applicable work covered by this Contract.

System	Phase A	Phase B	Phase C	Neutral	Ground
120/208V	Black	Red	Blue	White	Green
277/480V	Brown	Orange	Yellow	Gray	Green

D. All control wiring shall be color coded with wires of colors different from those to designate phase wires. All isolated ground conductors shall be green with a yellow tracer.

1.3 Disconnects (Safety Switches):
A. Furnish and install safety switches where indicated and as required for motor outlets or other equipment. Switches shall be of size, number of poles and fused or nonfused, as required for job conditions and the National Electrical Code.

B. Switches shall be equipped with fuse contacts and jaws which insure positive fuse and jaw contact by means of reinforcing spring clips or other approved means. All current carrying parts shall be silver plated. Hinges shall be non–current carrying. Switches shall be so designed that they can be locked in either open or closed position. Switches used with Class R fuses installed shall have rejection clip provisions.

C. All safety switches shall be quick–make, quick–break, and have interlocking cover with handle that may either be front or side operating with a padlocking provision, as manufactured by Square "D" or approved equal. Provide NEMA 3R enclosures where required to be weatherproof.

1.4 Motor Starters:
A. Provide starters, H–O–A switches and pilot lights for all motors. All temperature control wiring and components shall be under Division 15 – Mechanical.

B. Thermal manual motor starting switches shall be provided for all fractional horsepower, single phase motors, unless otherwise specified. Manual motor starters shall be of the snap–switch type containing thermal overload protection and a self–indicating trip–free handle. Starting switches shall be combined with a three–position hand–off–automatic selector switch when motor is controlled automatically. (Refer to mechanical equipment schedules.) Pilot indicating light shall be mounted in all starter enclosures where noted. The starters shall be Square D Company, Class 2510, Allen Bradley Bulletin 600, or approved equal. Enclosures shall be NEMA 1 for interior use.

C. Magnetic motor starters shall be provided for all three phase motors unless otherwise specified. Motor starters shall be 3 pole, 60 hertz, full–voltage, magnetic type with NEMA 1 enclosures, as required. Starters shall be provided with three element overloads. Where shown, starters shall be of the combination fused or unfused disconnect type as noted. Starters shall be equipped with hand–off–automatic selector switch when automatically controlled, a pilot indicating light and auxiliary contacts. Each magnetic starter shall have a 120 volt coil, an individual control power transformer and a fuse for protection of control wiring. Starters shall be Square D Company, Class 8536 and Class 8538 as required or approved equal.

1.5 Wiring Devices:
A. The following wiring devices shall be furnished and installed where called for on the drawings. Miscellaneous items not included below shall be Underwriters' Laboratories Standard conforming to the N.E.C. All devices shall be of the same manufacturer. Devices shall be Arrow Hart, General Electric, Circle F, or Hubbell or equal.

1) Wall Switches: Toggle switches shall be of the silent mechanical type rated 20 ampere. Three and four–way switches shall be of the same manufacturer and grade.

2) Receptacles: Receptacles for wall outlets shall be rated 20 ampere, 125 volts, duplex, three–wire with third pole grounded. GFCI shall be rated 20 ampere, 120 volt. Isolated ground (IG) receptacles shall be orange in color and be isolated ground type.

3) Special Wiring Devices: Shall be provided as shown on the drawings.

4) Dimmers: Shall be solid state, full wave, incandescent or fluorescent (based on the load controlled), rated 120 volt 1000/1500/2000 watts as required by the circuit. Provide Lutron "Nova" slide series or Prescolite "P" series.

5) Ground, phase and neutral conductors shall be pig–tailed in outlet boxes or multi–outlet assembly for receptacles so that ground and electrical service will not be disturbed to other receptacles on the same multi–wire circuit if receptacle is removed.

6) Device Plates: A device plate shall be provided for each outlet requiring one. All plates shall be manufactured of satin finish, .032 stainless steel, Type 430, except where specifically called for to be otherwise in these specifications. Telephone blank plates shall be of similar construction.

7) Where wiring devices are noted to be weatherproof, they shall be mounted with clear Lexan, hinged lid type covers which allow the plug to remain in while the cover is closed (Intermatic or equal).

1.6 Grounding:
A. The main service grounding system shall consist of three branches, one being a grounding conductor to the water piping system which shall be sized in accordance with the National Electrical Code, the second being a grounding conductor to the reinforcing steel and the concrete footings, the third being a grounding conductor to the electrode grounding system (driven ground rods) which shall be sized in accordance with the National Electrical Code. In all instances, the grounding conductor shall be bonded at both ends to the conduit which it is installed. The main service ground to the water piping system shall be connected on the street side of the water meter, or on a cold water pipe as near as practicable to the water service entrance to the building. Bonding jumpers shall be provided where required by the National Electrical Code. Bond all structural steel of the building to the main service ground bus.

B. Contractor shall provide a grounding system consisting of driven ground rods with interconnecting cables. Ground rods shall be installed with two feet of cover and cables exothermically welded. Ground rods shall be 3/4" diameter by 10 feet long copper clad steel, one piece, Copperweld #9450, or approved equal. Ground grid conductors shall be #1/0 bare direct buried. The ground system shall be so constructed that the resistance between the equipment and the ground shall not exceed 25 ohms.

C. Provide equipment grounding conductors in all raceways and cables sized in accordance with the NEC.

SERVICE AND DISTRIBUTION

1.1 Electrical:
A. Electrical service to the site is underground 120/208 volt, 3 phase, 4 wire service. Coordinate metering requirements with utility company. All work shall be in accordance with the utility company's standard and requirements.
All charges for permanent service by the utility company shall be paid for by the Owner.

1.2 Panelboards:
A. Furnish and install, where indicated on the drawings, automatic circuit breaker panelboards complete with enclosing cabinets. Enclosures shall be NEMA 1 for recessed or surface mounting as indicated. Where panelboards are recessed mounted, they shall be provided with a minimum of 3 @ 3/4" spare conduits per backbox to the accessible ceiling space above and terminated for future use. Panelboards and enclosing cabinets shall conform to standards established by Underwriters' Laboratories, Inc., and requirements of the NEC.

B. The Contractor shall balance the loading on all panelboards as closely as possible and to the satisfaction of the Engineer.

C. All panelboards interiors shall be factory assembled, complete with circuit breakers as scheduled on the drawings. All circuit breakers shall be quick–make and shall be trip indicating.

D. The circuit numbers used on the drawings are for identification only and the circuit number in the panel need not necessarily correspond. Each circuit in the panels, however, shall be accurately indexed as specified herein. Circuits shall be arranged in panels so that all lighting circuits are together, motor circuits are together, etc.

E. As specifically designated on the drawings, panelboards shall be 120/208 volt, and 277/480 volt, three phase employing bolt–on breakers of not less than the symmetrical A.I.C. ratings indicated on the drawings. Provide isolated ground bus and 200% neutral bus as designated on the drawings. Furnish type Square D, General Electric or Westinghouse as indicated on the panelboard schedule as follows:

Manufacturer	*120/208V*	*277/480V*
Square D	*NQOD*	*NF*
General Electric	*AQ*	*AE*
Cutler–Hammer	*POW–R–LINE*	*POW–R–LINE–2*

F. Distribution panels 600 amperes and larger shall be provided as scheduled on the drawings and shall accept branch breakers up to the mains rating of the panel. Panels shall be as manufactured by Square D – I–Line construction or equal.

1.3 Fuses:
A. Fuses for service entrance and distribution equipment shall be U.L. listed class RK–1 and L current limiting type. All fused switches shall incorporate rejection clips to insure only current limiting replacement fuses. Provide Bussman "low peak" or equal by Gould–Shawmut. Provide a spare set of three fuses to the owner for each ampere size and type used.

1.4 Dry Type Transformers:
A. Furnish and install where indicated on the drawings, self–cooled, dry type transformers of KVA, phase, and voltage ratings indicated on the drawings. Provide K–13 transformers suitable for use with non–linear loads where noted. Where transformers are not indicated to be "K" rated they shall be energy efficient type meeting NEMA TP–1 standards.

B. Transformers shall be enclosed in a suitable housing arranged for conduit entrance on the primary and secondary side. Cases shall be provided with adequate louvered openings to allow suitable ventilation and cooling. Transformers shall have Class H (220 degrees C) insulation for continuous operation at rated load in a 40 degree C. ambient with a temperature rise not exceeding 150 degree C.

C. Transformers shall have four 2–1/2% full rated KVA taps below and two 2–1/2% above rated primary voltage. Transformers shall have a noise level not exceeding 45 db based on standard NEMA test procedures.
D.
E. The transformers shall be wall or floor mounted as indicated. Wall mounted units shall be bracketed off the wall and structurally supported from the overhead structure with steel supports sufficiently sized to accommodate the transformer weight. All units shall be mounted on suitable vibration isolators.

F. Neutrals of all dry type transformers shall be grounded in accordance with the N.E.C. All transformers. Immediate connections to and from transformer shall be through flexible conduit. Complete shop drawings and details shall be submitted to the Engineer for approval. Transformer shall be Hevi–Duty Electric Company, General Electric, Sorgel or Acme.

LIGHTING

1.1 Scope:
A. Furnish and install a complete lighting fixture for each lighting fixture symbol shown on the drawings, of the type and quality described herein. Fixtures shall be installed complete with lamps of the wattage indicated, sockets, housing, ballast (if required), shades, diffusers, supports, etc., and wired for operation.

1.2 Requirements:
A. The Contractor shall be completely responsible for the proper and accurate position of sockets in all fixtures so that the filament of the size and type lamps specified, when installed in such sockets, will be in correct relation to the center of the fixture as specified by the manufacturer of the various lighting fixtures and glass units specified.

B. All sockets shall be approved by Underwriters' Laboratories, Inc. Fluorescent sockets shall be thru–slot type and incandescent lamp sockets shall be 250 volt code standard, medium base for lamps up to 200 watts inclusive and Mogul base for lamps 300 watts and larger. They shall be of Bryant, Hubbell, Arrow, Benjamin, General Electric or approved equal.

C. All fixtures shall be wired for polarized system with one wire in each fixture to be distinctly marked for its entire length. Wire shall bear the label of approval of the Underwriters Laboratories, Inc. Fixture wiring for fluorescent fixtures and branch circuit wiring in fluorescent fixture channels shall be type THHN or THW (90 degree C. rated). All channels in fluorescent lighting fixtures shall be approved for through wiring. Type AF wire shall only be used for interior incandescent fixture wiring.

D. All fixtures shall be in accordance with all local Municipal and State Requirements governing same and shall be U.L. approved.

E. All plastic diffusers shall be 100 percent virgin acrylic (nominal 1/8 inch thick) and all Lexan diffusers shall be Lexan Type MR–4000, or equal.

F. Each fixture shall be completely equipped with lamps of the size, type, wattage and shape indicated and specified. All lamps shall be manufactured by the General Electric Co., Westinghouse Mfg., Co., Sylvania or approved equal, of standard schedule make. Lumen output and life of lamps shall be proper voltage for the building. Exact voltage shall be checked before ordering fixtures.

G. Fluorescent lamps shall be Sylvania F032T84100K or approved equal, unless otherwise specified. Lamps shall be energy saver type.

H. All fluorescent lighting fixtures shall have energy saving, solid state electronic ballasts.

I. At the location of outlets indicated on the various drawings, the type of fixture required is designated by a type letter. All fixtures shall be furnished in the quantities, sizes and types as indicated on the drawings.

J. Recessed incandescent and fluorescent fixtures in ceilings may not be supported from the suspended ceiling construction. Box and fixture supports shall be fastened securely to concrete slab or bar joist except as noted. Where fixtures are surface mounted, neat holes shall be cut in the hung ceilings as required for the fixture supports. All support hangers, channels, bolts, etc., shall be galvanized or Galv–Krom.

K. Provide adequate supports for all fixtures separate from the suspended ceiling system. Contractor shall furnish and install all necessary accessories, as required, to support the fixtures. Provide a minimum of two (2) galvanized steel #12 gauge hanger wires (alternate corners) on all recessed fixtures.

COMMUNICATION SYSTEMS

1.1 Scope:
A. The Contractor shall furnish and install all material, labor and incidentals necessary for the complete installation and successful operation of the following systems:
(1) Telephone (conduit rough–in)

1.2 Telephone System:
A. Telephone service shall be extended by Telephone Company. Provide wall and floor telephone outlet boxes, conduits, backboards, sleeves, receptacles, and other equipment shown on the drawings for use by the Telephone Company. All charges by the Utility Company shall be paid by the Owner.

B. Wall outlets for telephone shall consist of 4" square boxes with single gang ring coverplate and 3/4" empty conduit to the nearest accessible ceiling.

C. Furnish 3/4" plywood backboard for telephone equipment, where indicated on drawings or as directed in field.

D. All elbows in conduit runs shall be wide sweep field bends. Install pull boxes as required and where directed by the Telephone Company and/or as required by the National Electrical Code.

E. Provide nylon pull wire in all conduits left empty. All conduits shall be terminated with nylon insulating bushings.

IECC COMPLIANCE CERTIFICATE

COM*check* Software Version 4.0.2.8
Interior Lighting Compliance Certificate

Project Information

Energy Code: 2012 IECC
Project Title: LIFELINE ACCESS CENTER
Project Type: New Construction

Construction Site: 325 S. Euclid Ave, Tucson, AZ 85719
Owner/Agent: LIFELINE
Designer/Contractor: DON PENN CONSULTING ENGINEER

Additional Efficiency Package
High efficiency HVAC. Systems that do not meet the performance requirement will be identified in the mechanical requirements checklist report.

Allowed Interior Lighting Power

A Area Category	B Floor Area (ft2)	C Allowed Watts / ft2	D Allowed Watts (B X C)
1-Health care clinic	5485	1	5485
		Total Allowed Watts =	5485

Proposed Interior Lighting Power

A Fixture ID : Description / Lamp / Wattage Per Lamp / Ballast	B Lamps/ Fixture	C # of Fixtures	D Fixture Watt.	E (C X D)
1-Health care clinic				
LED 1: A: 2x2 Lens: LED Linear 33W:	1	2	38	76
LED 2: B: 2x2 Volumetric: LED Linear 33W:	1	17	35	595
LED 3: C: 2x4 Volumetric: LED Linear 33W:	1	4	39	156
LED 4: D: 2x4 Acrylic Lens: LED Linear 33W:	1	17	46	782
LED 5: DE: 2x4 Acrylic Lens: LED Linear 33W:	1	3	46	138
LED 6: F: 4" Down light: LED PAR 20W:	1	2	13	26
LED 7: FE: 4" Down light: LED PAR 20W:	1	3	13	39
LED 8: G1: 48" Strip: LED Linear 33W:	1	1	32	32
LED 9: G2: 24" Strip: LED Linear 33W:	1	8	32	256
LED 10: H: Wall MTD Strip: LED Linear 22W:	1	3	24	72
LED 11: K: 1x4 Volumetric: LED Linear 22W:	1	11	30	330
LED 12: KE: 1x4 Volumetric: LED Linear 22W:	1	2	30	60
Linear Fluorescent 1: L: 48" T8 32W: Electronic: Exemption:Medical/Dental Procedure Lighting	4	16	110	Exempt
			Total Proposed Watts =	2562

Interior Lighting PASSES: Design 53% better than code

Interior Lighting Compliance Statement

Compliance Statement: The proposed interior lighting design represented in this document is consistent with the building plans, specifications, and other calculations submitted with this permit application. The proposed interior lighting systems have been designed to meet the 2012 IECC requirements in COM*check* Version 4.0.2.8 and to comply with the mandatory requirements listed in the Inspection Checklist.

Project Title: LIFELINE ACCESS CENTER
Report date: 04/13/16

ISSUED FOR ARIZONA STATE ASC PLAN REVIEW

Registered Professional Engineer (Electrical) CERTIFICATE NO 39123 D.J. PENN 1/19/17 Date Signed ARIZONA U.S.A.
Expires 6/30/18

dpce
don penn ▪ consulting engineer
635 Westport Parkway
Suite 300
Grapevine, Texas 76051
Phone: 817-410-2858
Fax: 817-251-8411

TENANT RENOVATIONS FOR:
LIFELINE ACCESS CENTER
325 S. Euclid Ave, Suite 109
Tucson, AZ 85719

Lifeline Vascular Access SM

InSync ARCHITECTURAL DESIGNS, INC.
1213 Old Pylesville Road Whiteford, MD 21160
Office 410-452-8006 Fax 410-452-8046

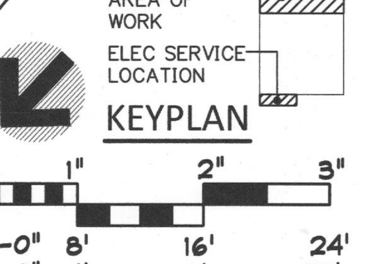

0" 1" 2" 3"
1/8"=1'-0" 8' 16' 24'
1/4"=1'-0" 4' 8' 12'

ELECTRICAL SPECIFICATIONS AND LIGHTING COMPLIANCE REPORT

REVISIONS		
REV#	DATE	DESCRIPTION
1	6/29/16	PERMIT REVIEW COMMENTS
	1/6/17	ARIZONA STATE ASC PLAN REVIEW

DRAWING NO. E5
SHEET OF 5
DATE 4/13/16 DRAWN BY JCW
JOB NUMBER 11222 CHECKED BY MSW

WDC# 16-25