CHILLED WATER/HOT WATER SCHEMATIC NOTES

1. REPLACE EXISTING TRIPLE DUTY VALVES WITH NEW CHECK VALVE, FLOW BALANCING VALVE AND ISOLATION VALVE. SEE DETAIL 5, SHEET M-502.
2. REPLACE EXISTING MANUAL VALVE ACTUATOR WITH NEW AUTOMATIC ACTUATOR LOCATED IN MECHANICAL ROOM.
3. REPLACE EXISTING TRIPLE DUTY VALVES WITH NEW CHECK VALVE AND ISOLATION VALVE. SEE DETAIL 5, SHEET M-502. (FLOW BALANCING VALVE IS LOCATED AT COOLING TOWER.)
4. SEE SHEET M-801 FOR CONTROL INSTRUMENT ACCESSORIES FOR CHILLED WATER SYSTEM AND SEE SHEET M-802 FOR HOT WATER SYSTEM CONTROL ACCESSORIES.
5. REPLACE EXISTING HOT WATER PUMPS, SEE SCHEDULE.
6. REPLACE EXISTING TRIPLE DUTY VALVES WITH NEW CHECK VALVE AND ISOLATION VALVE. SEE DETAIL 5 ON SHEET M-502 (PUMPS SERVED ARE VFD CONTROLLED).

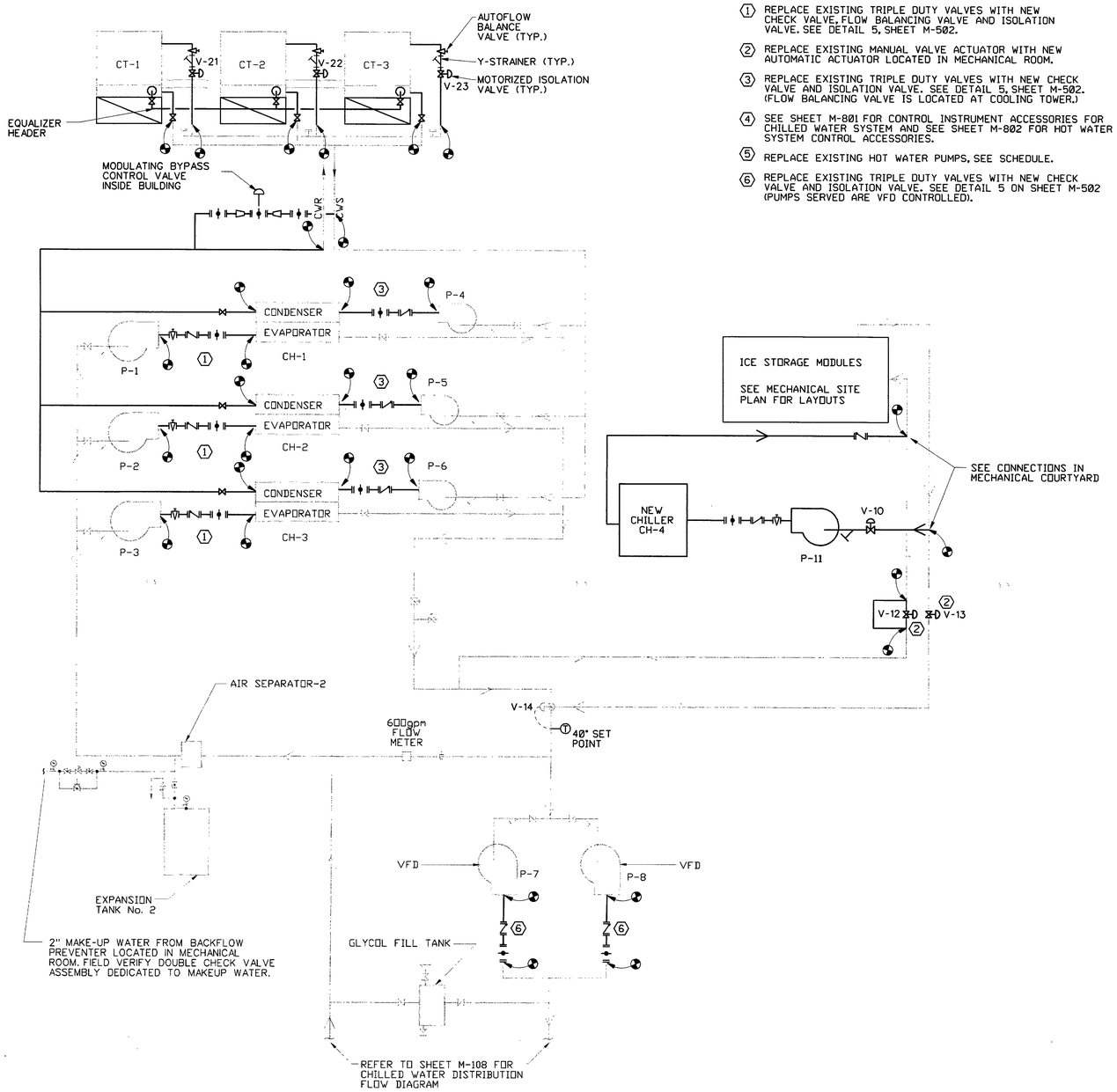

CHILLED WATER FLOW SCHEMATIC

NO SCALE

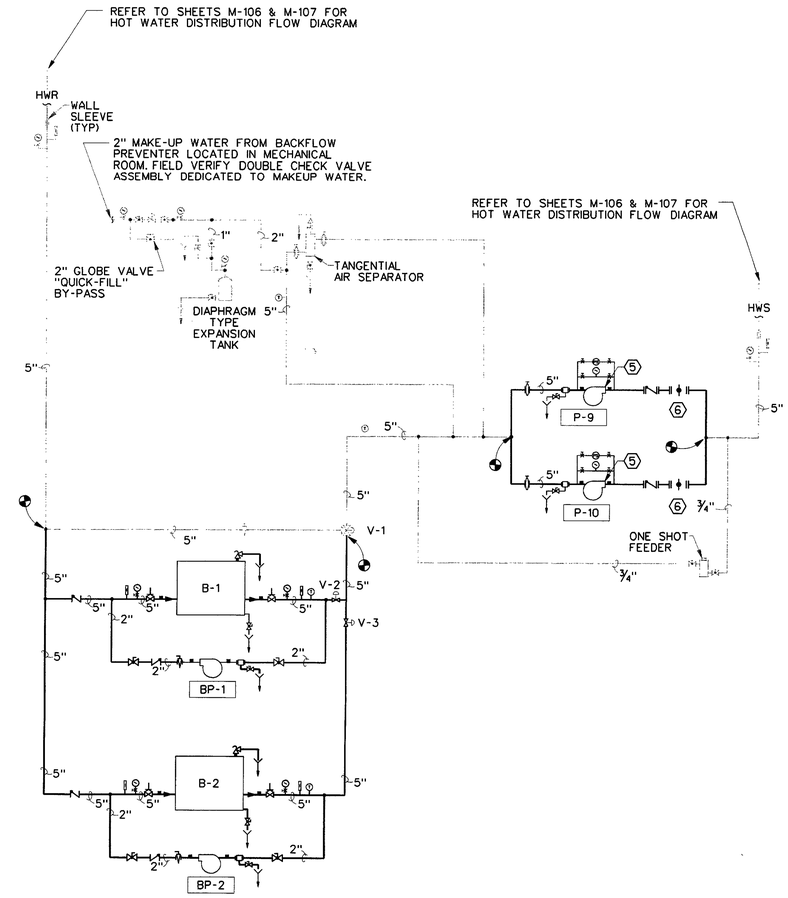

HOT WATER FLOW SCHEMATIC

NO SCALE

LEGEND

- NEW
- EXISTING
- CONNECT TO EXIST

THESE DOCUMENTS HAVE BEEN PREPARED PRIMARILY BASED ON INFORMATION PROVIDED BY OTHERS. I.C. THOMASSON HAS NOT VERIFIED THE ACCURACY OF ALL INFORMATION PROVIDED BY OTHERS. SEE LIMIT OF LIAIBILITIES STATEMENT ON COVER SHEET.

US ARMY ENGINEERING AND SUPPORT CENTER HUNTSVILLE

Symbol	Description	Date	Appr.	Symbol	Description	Date	Appr.

Checked by: WTT
Dwn by: ICT
DACA87-03-D-0006
Approved by:
Chief, Prj. Mgmt. Division
Date: 02/27/04
CADD File Name: 312M101.DGN
ICT Project No. 203121
Plot date: 02/27/04
Plot scale:

TASK ORDER #: FRR004
VANGUARD
PADUCAH, KENTUCKY
VOICE 270-442-8620
I.C. Thomasson Associates, Inc.
NASHVILLE, TENNESSEE
PHONE (615) 346-3400
ICT

DEFENSE INFORMATION SCHOOL
FT. MEADE MARYLAND
CHW & HW FLOW SCHEMATIC

Sheet reference number:
M-101