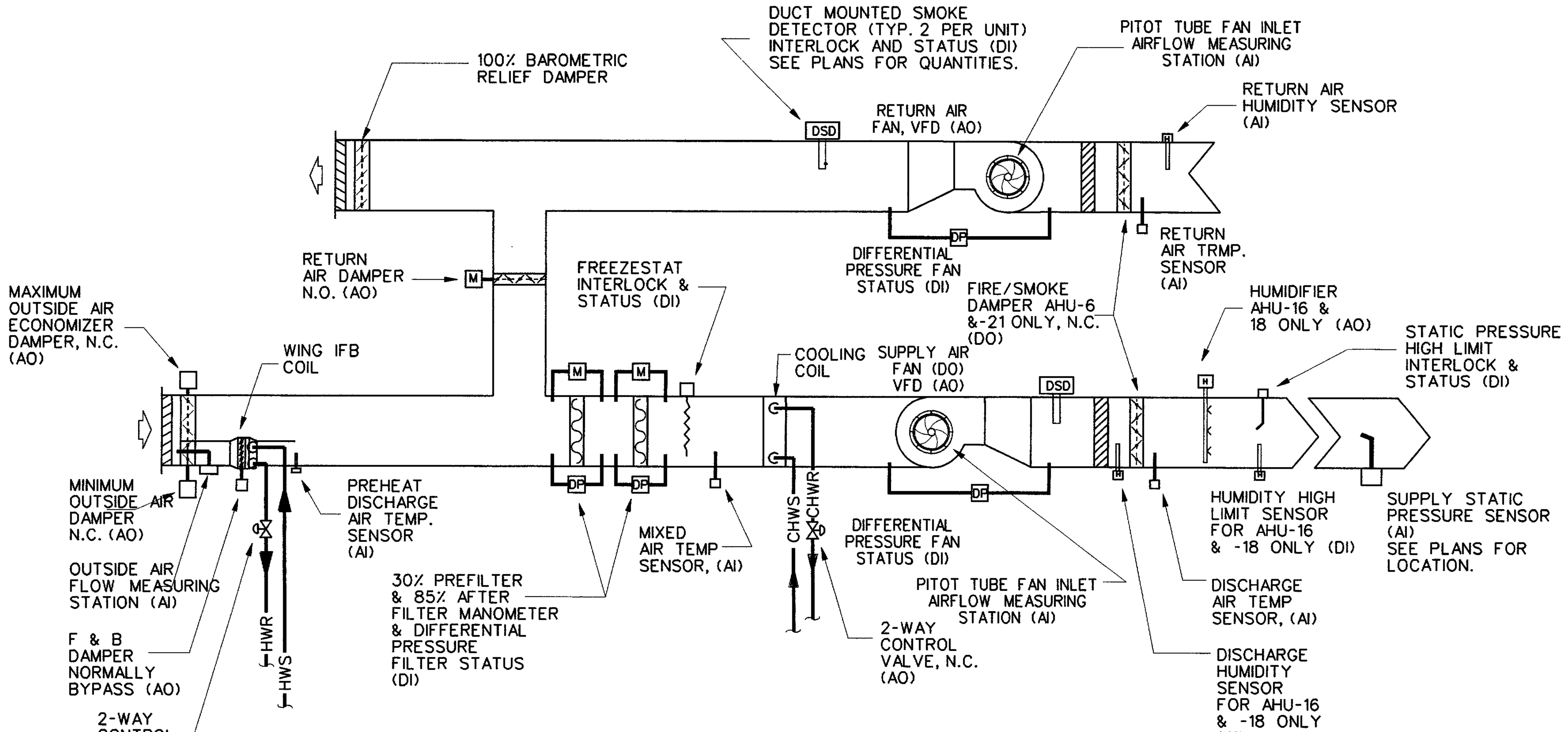

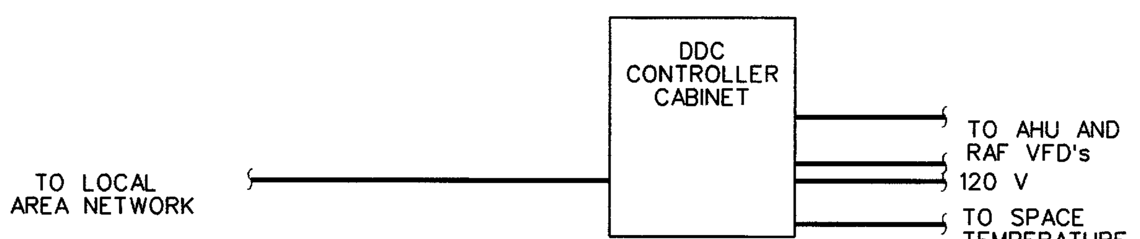

AHU CONTROLS

TYPICAL FOR VARIABLE AIR VOLUME UNITS

UNIT TYPE "D"

① HUMIDITY SENSORS SHALL BE DUCT MOUNTED WITHIN BUILDING A MINIMUM OF TWENTY FEET FROM ROOF PENETRATION.

② AHU-5, 6, 10, 11, 12, 13, 14, 15, 16, 17, 18, 21, 24, 27, 28 ARE UNIT TYPE "D"

PANEL DESIGNATION FT. MEADE - DINFOS

AHU CONTROLS VARIABLE AIR VOLUME AIR HANDLING UNIT UNIT TYPE "B"

HARDWARE

	OUTPUT (O) DIGITAL				OUTPUT (O) ANALOG				INPUT (T,D,V,C) DIGITAL						INPUT (T,D,V,C) ANALOG					
POINT DESCRIPTION	Control Relay	Solenoid	Contactor		Pneumatic Transducer	Electrical Transducer	4-20MA Module		Differential Pressure	Flow Switch	Pres. Switch Closure	Switch Closure	Open/Close	Contact Closure	Temperature	Relative Humidity	Pressure	Position	Flow	
SUPPLY AIR FAN S/S	●																			
SUPPLY AIR FAN STATUS									●											
RETURN AIR FAN STATUS									●											
SUPPLY STATIC PRESSURE																	●			
SUPPLY PRESSURE HIGH LIMIT											●									
SUPPLY FAN VFD							●													
RETURN FAN VFD							●													
SUPPLY AIRFLOW STATION																			●	
RETURN AIRFLOW STATION																			●	
RETURN AIR TEMPERATURE															●					
RETURN AIR HUMIDITY																●				
MIXED AIR TEMPERATURE															●					
UNIT DISCHARGE AIR TEMP.															●					
PREHEAT COIL AIR TEMPERATURE															●					
OUTSIDE AIR HUMIDITY																●				
OUTSIDE AIR TEMPERATURE															●					
MIN. OSA DAMPER CTL							●													
MAX. OSA DAMPER CTL							●													
RETURN AIR DAMPER CONTROL							●													
OUTSIDE AIRFLOW STATION																			●	
FILTER (2 THUS)									●											
HOT WATER VALVE CONTROL		●																		
CHILLED WATER VALVE CONTROL							●													
FACE & BYPASS DAMPER CTL							●													
F/S DAMPER CTL (AHU-6 & -21)	●																			
HUMIDIFIER (AHU-6 & -21)							●													
HUMIDIFIER HIGH LIMIT (AHU-6&21)												●								
SUPPLY HUMIDITY (AHU-6&21)																●				
DUCT SMOKE DETECTOR														●						
FREEZESTAT														●						

SOFTWARE

	ALARMS DIGITAL			ALARMS ANALOG				PROGRAM											
POINT DESCRIPTION	Equipment Status	Maintenance		High Limit	Low Limit	Run Time		Scheduled	Optimum Start/Stop	Duty Cycling	Demand Limiting	Day/Night Setback	Economizer	Ventilation/Recirculation	Temperature Control	Humidity Control	Supply Static Pressure	Speed Control	Position
SUPPLY AIR FAN S/S						●		●	●										
SUPPLY AIR FAN STATUS	●																		
RETURN AIR FAN STATUS	●																		
SUPPLY STATIC PRESSURE				●	●												●	●	
SUPPLY PRESSURE HIGH LIMIT	●			●															
SUPPLY FAN VFD				●	●												●	●	
RETURN FAN VFD				●	●													●	
SUPPLY AIRFLOW STATION																			
RETURN AIRFLOW STATION																		●	
RETURN AIR TEMPERATURE													●						
RETURN AIR HUMIDITY													●			●			
MIXED AIR TEMPERATURE																			
UNIT DISCHARGE AIR TEMP.				●	●														
PREHEAT COIL AIR TEMPERATURE				●	●														
OUTSIDE AIR HUMIDITY													●						
OUTSIDE AIR TEMPERATURE													●						
MIN. OSA DAMPER CTL								●	●			●	●						●
MAX. OSA DAMPER CTL								●	●			●	●		●				●
RETURN AIR DAMPER CONTROL								●	●			●	●		●				●
OUTSIDE AIRFLOW STATION																			
FILTER (2 THUS)		●																	
HOT WATER VALVE CONTROL															●				●
CHILLED WATER VALVE CONTROL													●		●	●			●
FACE & BYPASS DAMPER CTL								●	●			●			●				●
F/S DAMPER CTL (AHU-6 & -21)	●																		●
HUMIDIFIER (AHU-6 & -21)																●			
HUMIDIFIER HIGH LIMIT (AHU-6&21)	●															●			
SUPPLY HUMIDITY (AHU-6&21)													●			●			
DUCT SMOKE DETECTOR	●																		
FREEZESTAT	●																		

NOTE: PROVIDE DYNAMIC GRAPHIC REPRESENTATIVE OF EACH PIECE OF EQUIPMENT

SEQUENCE OF OPERATION
VARIABLE AIR VOLUME AIR-HANDLING UNIT

1. SUPPLY AIR FAN (SAF): THE SUPPLY AIR FAN VARIABLE FREQUENCY DRIVE (VFD) IS MANUALLY ENABLED WHEN THE VFD H-O-A SWITCH IS IN THE HAND POSITION. IN THE AUTO POSITION, WHEN AIR IS REQUIRED FOR OPTIMUM START OR NIGHT SETBACK (HEATING OR COOLING) OR IF THE AIR-HANDLING UNIT IS SCHEDULED TO RUN, THE DDC CONTROLLER WILL ENABLE THE SUPPLY FAN VFD. WHEN AHU-6 AND AHU-21 ARE COMMANDED ON BY OR AUTOMATIC OR MANUAL INITIATION, THE DDC CONTROLLER SHALL OPEN SUPPLY AND RETURN FIRE/SMOKE DAMPERS AND CLOSE DAMPERS WHEN COMMANDED OFF. DAMPERS SHALL CLOSE IN ALARM CONDITION.

2. FAN STATUS: ALL FANS CONTROLLED BY VFDs WILL START AT A MINIMUM SPEED (CFM) AND STATUS SWITCHES WILL BE COORDINATED WITH THE MINIMUM FAN OUTPUT.

   WHEN THE FAN IS TURNED ON, THE FAN STATUS DETERMINES IF THERE IS AIR MOVEMENT IN THE DUCT. AFTER AN OPERATOR-DEFINED FEEDBACK TIME DELAY, IF THERE IS NO AIR MOVEMENT IN THE DUCT, AN ALARM WILL BE GENERATED. ONCE THE TIME DELAY HAS PASSED, IF THE FAN STATUS INDICATES OFF (FIRE ALARM/FREEZESTAT, OVERLOADS, MANUAL SHUTDOWN) AND THE FAN IS COMMANDED ON, AN ALARM WILL BE GENERATED.

3. RETURN AIR FAN (RAF): THE RESPECTIVE RETURN AIR FAN VFD IS INTERLOCKED WITH THE SUPPLY FAN VFD TO BE ENABLED WHEN THE SUPPLY FAN VFD IS ENABLED. STATUS IS MONITORED TO GENERATE AN ALARM IF THE SUPPLY FAN VFD IS ENABLED BUT THE RETURN FAN STATUS INDICATES OFF AFTER THE PROOF FEEDBACK TIME DELAY HAS EXPIRED.

4. MINIMUM OUTSIDE AIR DAMPERS: THE MINIMUM OUTSIDE AIR DAMPERS WILL BE OPENED WHENEVER THE AIR-HANDLING UNIT IS SCHEDULED TO OPERATE, RETURN AIR TEMP IS MINIMUM 65°F, AND THE FAN STATUS INDICATES "ON". MINIMUM OUTSIDE AIR DAMPER SHALL MODULATE AS REQUIRED TO DELIVER SCHEDULED MINIMUM OSA BASED UPON MEASUREMENTS OF OUTSIDE AIRFLOW MEASURING STATION. WHEN OUTSIDE AMBIENT AIR TEMP. DROPS BELOW 40°F, FACE & BYPASS PREHEAT COIL VALVE SHALL OPEN TO ALLOW FULL FLOW OF HW THROUGH COIL. DAMPERS OF FACE & BYPASS PREHEAT COIL SHALL MODULATE AS REQUIRED TO MAINTAIN SCHEDULED DISCHARGE AIR TEMPERATURE OF AHU. WHEN THE AIR-HANDLING UNIT STARTS FOR OPTIMUM START OR NIGHT SETBACK, THE MINUMUM OUTSIDE AIR DAMPERS WILL REMAIN CLOSED.

5. DISCHARGE AIR CONTROL:
   A. AIR TEMPERATURE CONTROL: THE DDC CONTROLLER WILL MODULATE THE CHILLED WATER VALVE AS REQUIRED TO MAINTAIN THE SCHEDULED DISCHARGE AIR TEMPERATURE SETPOINT. SOFTWARE LOGIC WILL PREVENT SIMULTANEOUS HEATING AND COOLING. THE DISCHARGE AIR TEMPERATURE SENSOR WILL PREVENT DISCHARGE AIR TEMPERATURES FROM EXCEEDING LIMITS SET FOR PRE-HEAT MODE AND COOLING MODE. LIMITS FOR EACH MODE WILL BE OPERATOR DEFINED. MODE CHANGE FREQUENCY WILL BE OPERATOR DEFINED.
   B. DISCHARGE TEMPERATURE RESET: WHEN THE UNIT IS IN THE SCHEDULED UNOCCUPIED MODE, COOLING COIL VALVE SHALL MODULATE TO MAINTAIN A MAXIMUM DISCHARGE AIR TEMPERATURE OF 72°F WITH ALL ASSOCIATED VAV TERMINAL DEVICES INDEXED TO THE MINIMUM CFM POSITION. UPON A CALL FOR COOLING FROM ANY VAV ZONE (SPACE TEMP. GREATER THAN 85°F), THE DISCHARGE TEMP. SHALL RETURN TO SCHEDULED VALUE FOR 15 MINUTES AND THEN RETURN TO 72°F. WHEN THE UNIT RETURN AIR HUMIDITY SENSOR INDICATES RH GREATER THAN 58%, THE DISCHARGE AIR TEMP. SHALL RETURN TO THE SCHEDULED VALUE FOR 15 MINUTES AND THEN RETURN TO 72°F.
   C. HUMIDIFICATION: (UNITS AHU-16, 18) THE DDC CONTROLLER WILL ENERGIZE HUMIDIFIER WHEN RETURN HUMIDITY SENSOR REPORTS RH BELOW 35%. THE CONTROLLER SHALL DEENERGIZE IF THE DISCHARGE HUMIDITY SENSOR INDICATES 95% RH OR GREATER.

6. SUPPLY DUCT STATIC PRESSURE CONTROL: THE DDC CONTROLLER WILL AUTOMATICALLY MODULATE THE SUPPLY FAN VFD WHEN THE VFD CONTROLLER SWITCH IS IN AUTOMATIC POSITION. SUPPLY FAN VFD WILL BE CONTROLLED MANUALLY WHEN THE VFD CONTROLLER SWITCH IS IN THE LOCAL POSITION.THE VFD WILL MODULATE BETWEEN THE MINIMUM AND MAXIMUM SPEED (CFM) SETTINGS TO MAINTAIN THE SUPPLY DUCT STATIC PRESSURE SETPOINT (INITIALLY SET AT 1.5" W.C., ADJUSTABLE).

7. FAN TRACKING CONTROL:
   A. (FOR RETURN FAN CONTROL): THE DDC CONTROLLER WILL AUTOMATICALLY MODULATE THE RETURN FAN VFD WHEN THE VFD CONTROLLER SWITCH IS IN THE AUTOMATIC POSITION. RETURN FAN VFD WILL BE CONTROLLED MANUALLY WHEN THE VFD CONTROLLER SWITCH IS IN THE HAND POSITION. THE VFD WILL MODULATE BETWEEN A MINIMUM AND MAXIMUM SPEED (CFM) TO MAINTAIN FAN TRACKING RELATIONSHIP WITH SUPPLY FAN AS INDICATED BELOW.

AHU	RETURN FAN SETTING AT SUPPLY FAN MAX. (CFM)
5	5164
6	21821
10	6999
11	2970
12	8221
13	2004
14	5399
15	9015

AHU	RETURN FAN SETTING AT SUPPLY FAN MAX. (CFM)
16	4849
17	9578
18	5203
21	15571
24	21741
27	8353
28	12275

   B. (FOR EXHAUST FAN): THE DDC CONTROLLER SHALL ENERGIZE THE ASSOCIATED EXHAUST FAN(S) ONLY WHEN MINIMUM OUTSIDE AIR DAMPER IS OPEN. SEE EXHAUST FAN INTERLOCK SCHEDULE.

8. ECONOMIZER COOLING: ECONOMIZER COOLING IS ENABLED WHENEVER THE OUTSIDE AIR ENTHALPY IS LESS THAN THE RETURN AIR ENTHALPY. WHEN THE ECONOMIZER IS ENABLED, THE DDC CONTROLLER WILL MODULATE IN CONCERT THE MAXIMUM OUTSIDE AIR DAMPER TO THE FULL OPEN POSITION AND THE RETURN AIR DAMPER TO THE FULL CLOSED POSITION AND THE COOLING COIL VALVE WILL MODULATE AS REQUIRED TO MAINTAIN THE DISCHARGE AIR TEMP. SETPOINT. AS OSA TEMP. DROPS, THE RETURN AIR AND MAX. OSA DAMPER SHALL MODULATE IN TANDEM (CLOSING MAX. OSA DAMPER) TO MAINTAIN SCHEDULED AHU DISCHARGE SETPOINT. WHEN MAX. OSA DAMPER CLOSES TO THE FULL CLOSED POSITION, THE PREHEAT SEQUENCE BEGINS.

9. SAFETIES: SAFETY DEVICES (DUCT SMOKE DETECTOR, FREEZESTAT, STATIC PRESSURE HIGH LIMIT) ARE INTERLOCKED WITH THE FAN STARTER CIRCUIT. THE DEVICES DISABLE THE SUPPLY FAN AND RETURN FAN VFDs, CLOSE THE MINIMUM AND MAXIMUM OSA DAMPERS, AND FULLY OPEN THE RETURN DAMPERS. ALL SAFETIES SHALL HAVE AUXILIARY CONTACTS SUCH THAT WHEN ACTIVATED THE DDC CONTROLLER WILL GENERATE AN ALARM. ANY FIRE ALARM SYSTEM SIGNAL GENERATED IN THE BUILDING SHALL CAUSE THE DDC SYSTEM TO SHUT DOWN ALL AHUs.

10. PREHEAT COIL CONTROL: THE DDC CONTROLLER WILL ENABLE THE IFB PREHEAT COIL HOT WATER VALVE WHENEVER THE OUTSIDE AIR TEMPERATURE IS BELOW 40°F. REGARDLESS OF WHETHER THE UNIT IS COMMANDED ON OR NOT. THE DDC CONTROLLER WILL MODULATE THE FACE AND BYPASS DAMPERS TO MAINTAIN SCHEDULED AHU DISCHARGE AIR TEMP.

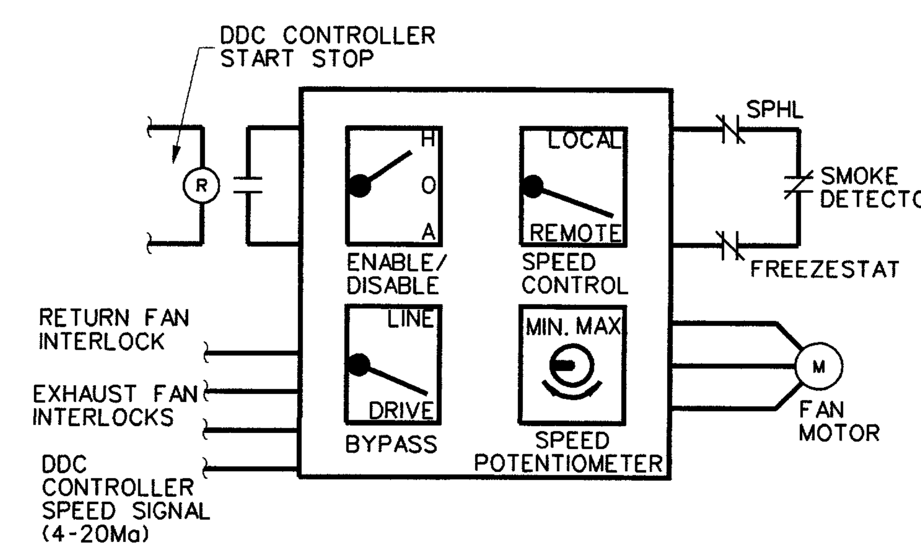

SUPPLY FAN VFD

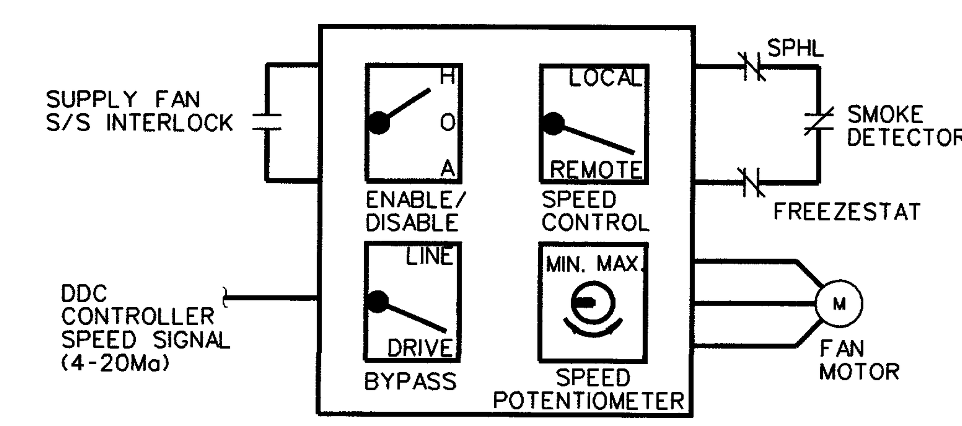

RETURN FAN VFD

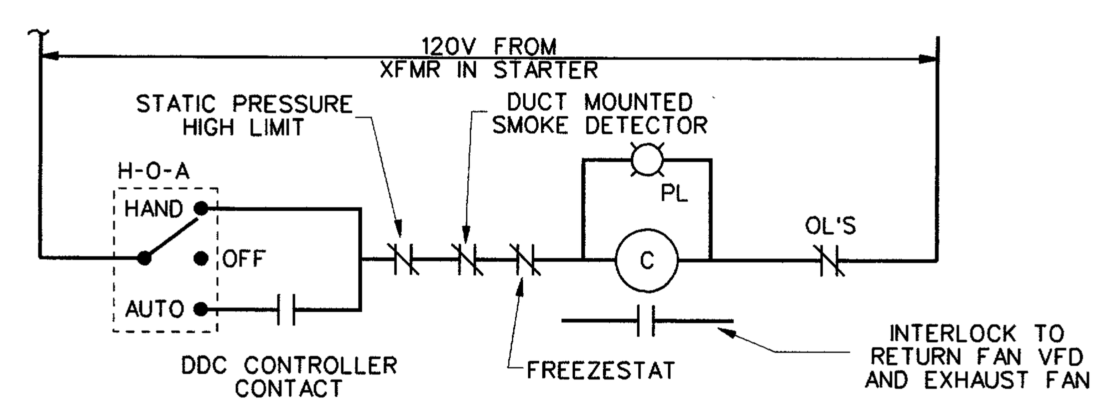

SUPPLY FAN CONTROL

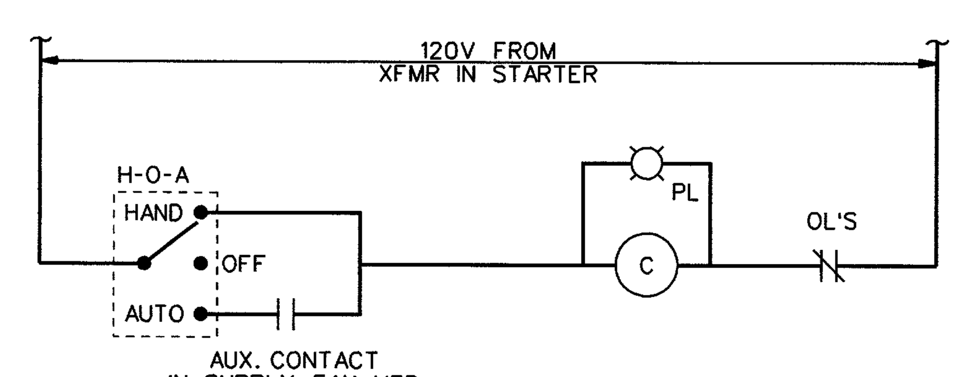

RETURN FAN CONTROL

THESE DOCUMENTS HAVE BEEN PREPARED PRIMARILY BASED ON INFORMATION PROVIDED BY OTHERS. I.C. THOMASSON HAS NOT VERIFIED THE ACCURACY OF ALL INFORMATION PROVIDED BY OTHERS. SEE LIMIT OF LIAIBILITIES STATEMENT ON COVER SHEET.

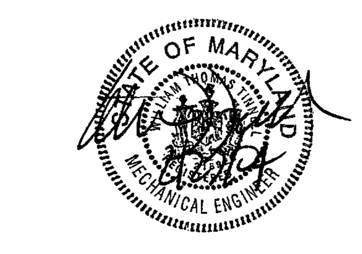

US ARMY ENGINEERING AND SUPPORT CENTER HUNTSVILLE

Symbol	Description	Date	Appr.

Date: 02/27/04
CADD File Name: 3121M803.DGN
ICT Project No. 203121
Plot date: 02/27/04
Plot scale:
Checked by: WTT
Dwn by: ICT
DACA87-03-D-0006
Approved by:
Chief, Prj. Mgmt. Division

TASK ORDER #: FRR004
VANGUARD
PADUCAH, KENTUCKY VOICE 270-442-8620
I.C. Thomasson Associates, Inc.
NASHVILLE, TENNESSEE PHONE (615) 346-3400
ICT

DEFENSE INFORMATION SCHOOL
FT. MEADE MARYLAND
NEW VARIABLE VOLUME AHU CONTROLS

Sheet reference number:
M-806