CONCRETE BEAM SCHEDULE

MARK	SIZE WIDTH	SIZE DEPTH	BOTTOM BARS NUMBER	SIZE	TYPE	a	b	NO. OF LAYERS	REMARKS	TOP BARS NUMBER	SIZE	TYPE	a	b	NO. OF LAYERS	REMARKS	STIRRUPS NUMBER	SIZE	SPACING	LOCATION
B1	12	22	3	6	2	6"	—	1	—	2	8	10	5'-0"	—	1	Disc. End	10	#3	1@2" 4@12"	Each End
B2	12	22	3	6	3	6"	6"	1	—	4	8	7	5'-0"	5'-0"	1	B3 End	14	#3	1@2", 2@6" 4@12"	Each End
B3	12	22	3	8	2	6"	-	1	—	2	8	6	4'-10"	-	1	Disc. End	14	#3	1@2", 2@6" 4@12"	Do
B4	12	19	3	6	2	6"	—	1	—	4	8	10	5'-0"	—	1	Disc. End	10	#3	1@2" 4@12"	Do
B5	12	19	4	7	2	6"	—	1	—	2	7	6	4'-10"		1	Disc. End	12	#3	1@2" 5@12"	Do
B6	12	18	3	6	2	6"	-	1	—	3	7	10	5'-0"	-	1	Disc End	10	#3	1@2" 4@12	Do
B7	12	18	3	7	3	6"	6"	1	—	2	7	7	5'-0"	5'-0"	1	B8 End	12	#3	1@2" 5@12"	Do
B8	12	18	3	7	3	6"	6"	1	—	2	7	7	5'-0"	5'-0"	1	Each End	12	#3	1@2" 5@12"	Do
B9	12	18	3	7	2	6"	-	1	—	2 2	7 7	6 7	4-10 5-0	- -	1	Disc End	12	#3	1@2" 5@12"	Do
B10	14	24	5	9	1	—	—	1	—	3	9	6	4'-10"	—	1	Each End	14	#3	1@2", 4@6" 2@12"	Do
B11	12	24	4	8	2	6"	-	1	—	2	9	6	4'-6"	—	1	Disc. End	8	#3	1@2" 3@12"	Do
B12	12	24	2	8	3	6"	6"	1	—	4	9	7	4'-9"	4'-9"	1	B11 End	10	#3	1@2" 4@12"	Do
B13	12	24	2	8	2	6"	—	1	—	3	7	10	5'-6"	—	1	Disc. End	8	#3	1@2" 3@12"	Do
B14	14	24	3	9	2	6"	—	1	—	2 2	9 9	7 6	4'-6" 4'-6"	4'-6" —		Cont. End Disc. End	14	#3	1@2", 2@6" 2@8", 2@12"	Do
B15	14	24	3	9	3	6"	6"	1	—	2	9	7	4'-6"	4'-6"	1	Each End	14	#3	1@2", 2@6" 2@8", 2@12"	Do
B16	8	12	2	6	1	—	—	1	—	2	5	6	2'-6"	—	1	Each End	6	#3	1@2" 2@12"	Do
B17	15	24	4	8	2	6"	—	1	—	3	9	6	4'-0"	—	1	Disc. End	14	#3	1@2", 4@6" 2@12"	Do
B18	15	24	3	8	2	6"	—	1	—	3	8	6	4'-6"	—	1	Disc End	14	#3	1@2, 2@6 2@8, 2@12	Do
B19	15	24	4	8	3	6"	6"	1	—	5	10	7	5'-0"	5'-0"	1	Each End	14	#3	1@2, 2@6 2@8, 2@12	Do
B20	15	24	4	8	3	6"	6"	1	—	—							14	#3	1@2", 2@6" 2@8" 2@12"	Do
B21	10	24	2	8	2	6"	—	1	—	2	6	6	3'-6"	—	1	Disc. End	8	#3	1@2" 3@12"	Do
B22	10	24	2	8	3	6"	6"	1	—	3 2	7 7	7 7	4'-6" 4'-6"	4'-6" 4'-6"	1 1	B30 End B23 End	8	#3	1@2" 3@12"	Do
B23	10	24	2	8	3	6"	6"	1	—	3 1	7 7	7 7	4'-6" 4'-6"	4'-6" 4'-6"	1 1	West End East End	8	#3	1@2" 3@12"	Do
B24	12	22	3	6	2	6"	—	1	—	4	8	10	4'-9"	—	1	Disc. End	6	#3	1@2", 2@12	Do
B25	12	22	4	8	3	6"	6"	1	—	—							14	#3	1@2", 4@6" 2@12"	Do
B26	12	24	4	8	1	—	—	1	—	2	8	6	4'-10	—	1	Each End	8	#3	1@2" 3@12"	Do
B27	14	24	3	9	3	6"	6"	1	—	2	10	7	4'-6"	4'-6"	1	Each End	14	#3	1@2", 2@6" 2@8", 2@12"	Do
B28	14	24	3	9	2	6"	—	1	—	2 2	10 9	7 6	4'-6" 4'-6"	4'-6" —		Cont. End Disc End	14	#3	1@2, 2@6 2@8, 2@12	Do
B29	12	18	3	8	1	—	—	1	—	2	8	6	2'-9"	—	1	Each End	6	#3	1@2" 2@12"	Do
B30	10	24	3	8	2	6	-	1	—	2 3	7 7	6 7	4-6 4-6	- 4-6	1 1	Disc. End Con't. End	8	#3	1@2" 3@12"	Do
B31	8	39	2	9	1	—	—	1	—	2	8	6	3-6	—	1	Each End	8	#3	1@2" 3@12"	Do
B32	8	12	3	6	1	—	—	1	—	2 2	6 6	7 6	3'-6" 2'-6	3'-6" —	1	Cont. End Disc. End	6	#3	1@2" 2@12"	Do
B33	10	15	2	6	2	6	-	1		3	7	10	4'-0"	—	1	Disc. End	6	#3	1@2" 2@12"	Do
B34	10	15	3	7	2	6	-	1		2	7	6	3'-0"	—	1	Do	6	#3	Do	Do
B35	10	15	2	7	1	—	—	1		2	6	6	3'-0"	—	1	Do	8	#3	1@2", 1@6" 2@12"	Do
B36	10	15	2	7	1	—	—	1		4	6	7	3'-9"	3'-9"	1	B35 End	8	#3	Do	Do
B37	10	15	2	7	1	—	—	1		4	6	7	3'-9"	3'-9"	1	B36 End	8	#3	Do	Do
B38	10	15	2	6	1	—	—	1		2	7	10	3'-9"	—	1	Disc. End	4	#3	1@2" 1@12"	Do
B39	12	30	3	7	1	—	—	1		3	8	10	5'-0"	—	1	Do	8	#3	1@2" 3@12"	Do

BEAM SCHEDULE CONTINUED ON SHEET S-13

SOLID SLAB SCHEDULE

MARK	THICKNESS	BOTTOM BARS SIZE	SPACING	TYPE	TOP BARS SIZE	SPACING	TYPE	"a"	"b"	REMARKS	TEMPERATURE BARS SIZE	SPACING
S1	4"	4	6"	1	4	12"	6	2'-6"	—	Each End	3	12"
S2	See Plan	4	12"	3	4	10"	7	3'-0"	3'-0"	Each End	3	12"
S3	See Plan	4	12"	2	3	10"	6	2'-6"	—	Disc. End	3	12"
S4	4"	4	9"	3	4	8"	7	3'-0"	3'-0"	Each End	3	12"
S5	4"	4	9"	3	4	8"	7	3'-0"	3'-0"	South End Only	3	12"
S6	7"	6	6"	2	6	12"	6	4'-0"	—	Disc. End Only	3	8"
S7	4"	4	12"	3	—						3	12"
S8	4"	4	6"	2	4	9"	10	4'-0"	—	Disc. End	3	12"
S9	4"	4	9"	3	3	9"	7	2'-6"	2'-6"	North End Only	3	12"
S10	4"	4	12"	3	7	6"	7	2'-6"	4'-9"	B26 End Only	3	12"
S11	4"	4	9"	2	3	9"	6	2'-6"	—	Disc. End Only	3	12"
S12	6"	5	8"	1	4	8"	6	2'-6"	—	Each End	3	9"
S13	7"	6	6"	1	6 6	12" 12"	6 7	3'-0" 3'-0"	— 2'-0"	Disc. End Cont. End	3	6"
S14	6"	5	8"	1	4 4	8" 8"	6 7	2'-6" 2'-6"	— 1'-6"	Disc. End cont. End	3 3	9" 9"
S15	6"	4	10"	2	3	10"	6	2'-6"	—	Disc End	3	9"
S16	6"	4	10"	2	7	10"	7	3'-9"	3'-9"	Over Support	3	9"
S17	6"	4	10"	1	5	10"	6	4'-0"	—	—	3	9"
S18	4"	4	9"	1	3	9"	5	2'-3"	—	Each End	3	12"
S19	6"	4	6"	1	4	12"	7	2'-0"	2'-0"	Each End	3	9"
S20	6"	4	6"	1	4	12"	6	2'-6"	—	Each End	3	9"
S21	6"	5	8"	2	4 4	8" 8"	6 7	2'-6" 3'-6"	— 3'-6"	Disc. End Con't End	3	9"
S22	4"	3	12"	3	4	6"	3	6'-0"	2'-6"	—	3	12"
S23	4"	3	12"	3	—					—	3	12"
S24	4"	4'	12"	3	4	10"	7	3'-0"	3'-0"	S3 End Only	3	12"
S25	4"	4	12"	2	4	10"	10	3'-0"	—	Disc. End	3	12"
S26	7"	6	6"	1	5	8"	6	4'-0"	-	Each End	4	14"
S27	6"	6	8"	1	6 5	6" 12"	7 5	5'-6" 4'-3"	5'-6" -	Cont. End Disc. End	3	9"
S28	6"	6	8"	1	5	6"	7	5'-3"	4'-6"	Cont End	3	9"
S29	6"	5	8"	1	4	6"	7	4'-6"	3'-6"	Cont. End	3	9"
S30	6"	4	8"	1	4	12"	5	3'-0"	-	Disc. End	3	9"
S31	7"	4	6"	1	4	12"	5	3'-0"	-	Each End	4	14"
S32	7"	4	6"	1	4 4	12" 12"	5 9	3'-0" 3'-0"	- -	Disc End Cantilever End	4	14"
S33	7"	4	6"	1	4 4	12" 12"	5 7	3'-0" 3'-0"	- 3'-0"	Disc End Cont. End	4	14"
S34	6"	5	6"	1	5	6"	7	3'-0"	5'-0"	Extend into 5" slab on grade	3	9"
S35	6"	5	6"	1	5 4	5" 12"	7 6	5'-0" 4'-0"	5'-0" 1'-3"	S34 End Disc End	3	9"
S36	5"	5	7"	1	4 5	9" 7"	- 7	- 4'-6"	- 3'-6"	See Stair Detail S37 End	3	9"
S37	5"	5	7"	1	4 4	9" 9"	7 6	3'-6" 3'-6"	3'-0" -	Extend into adj slabs Disc End	3	9"

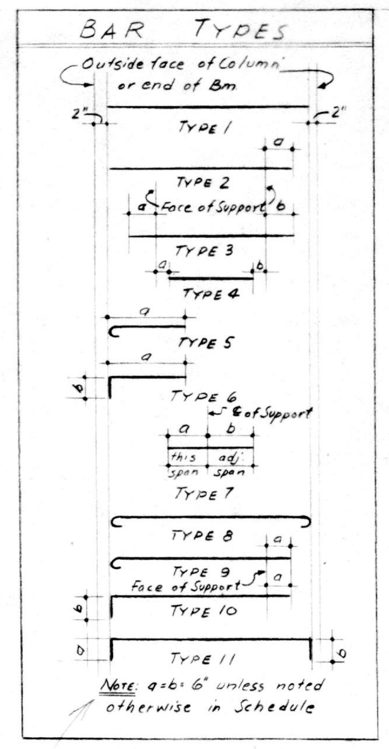

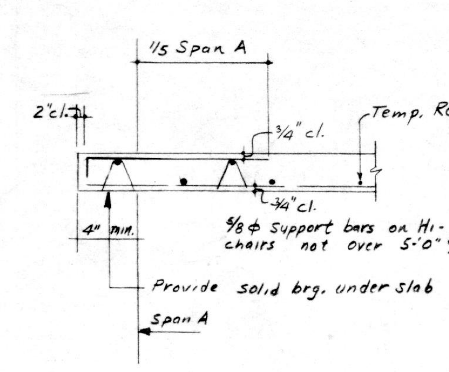

MAIN SLAB REINFORCEMENT PERPENDICULAR TO WALL

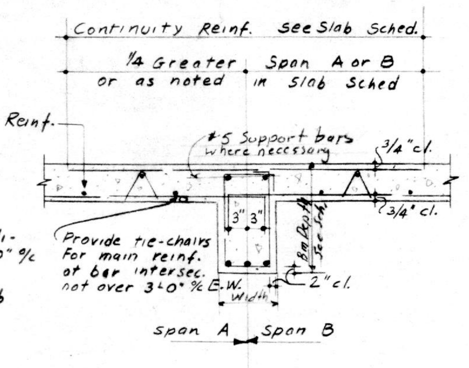

SECTION THROUGH CONCRETE SLAB AND CONCRETE BEAMS

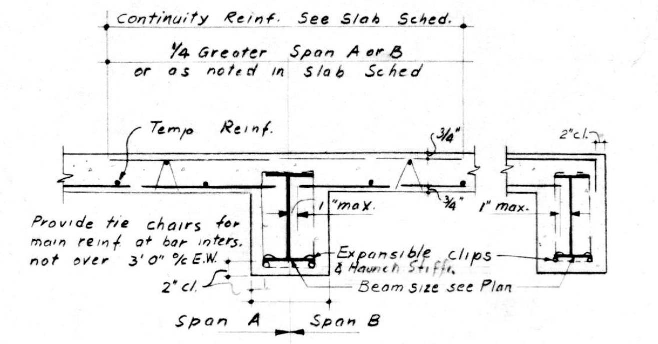

SECTION THROUGH CONCRETE SLAB AND STRUCTURAL STEEL BEAMS

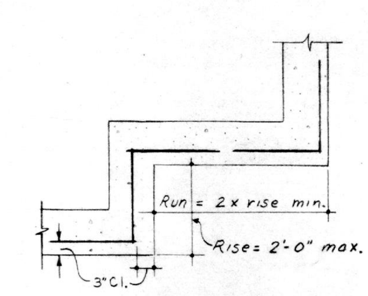

TYPICAL DETAIL OF STEP IN FOOTING

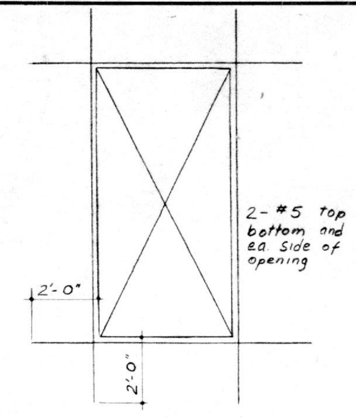

(ELEVATION)
TYPICAL DETAIL OF OPENING THROUGH CONCRETE WALL

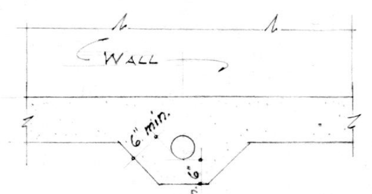

TYPICAL DETAIL - PIPE THRU - FOOTING

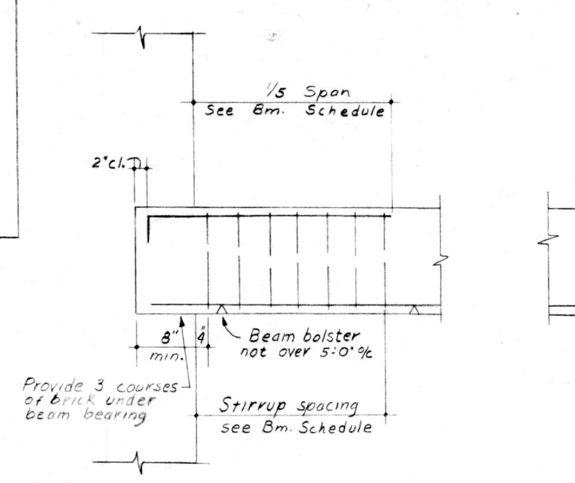

DISCONTINOUS END (WALL) BEAM

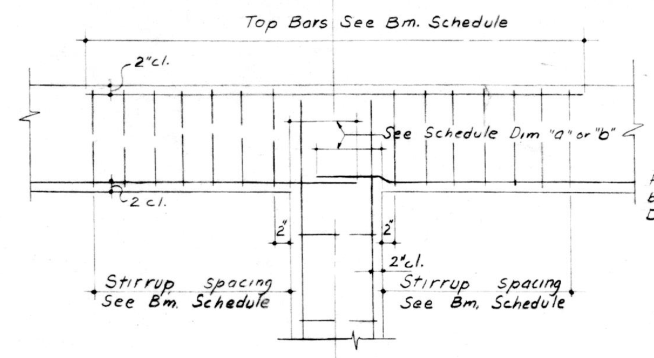

CONTINOUS END (COLUMN) BEAM

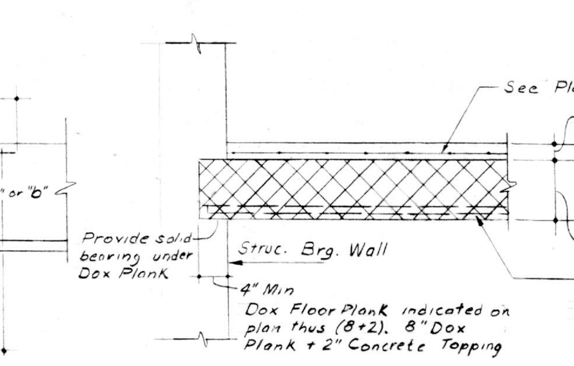

DOX PLANK BRG. ON EXT. WALL

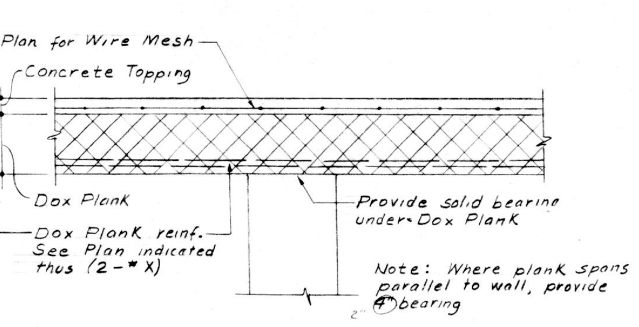

DOX PLANK BRG. ON INT. WALL

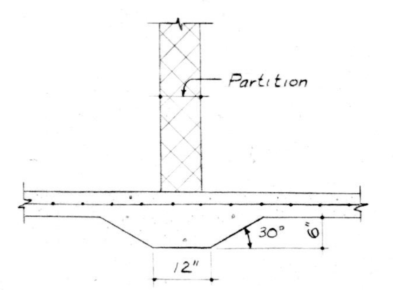

TYPICAL DEPRESS OF SLAB ON EARTH UNDER PARTITION

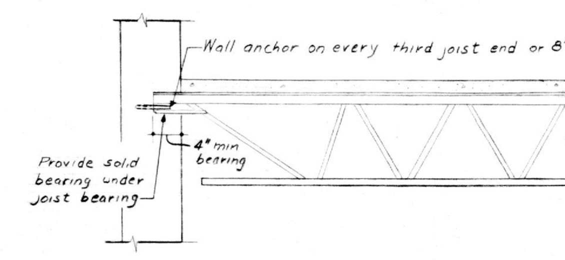

TYPICAL STEEL JOIST BEARING ON WALL

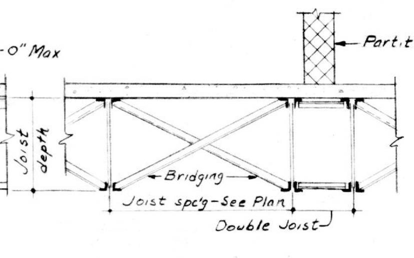

BRIDGING AND STEEL JOIST AT PARTITION

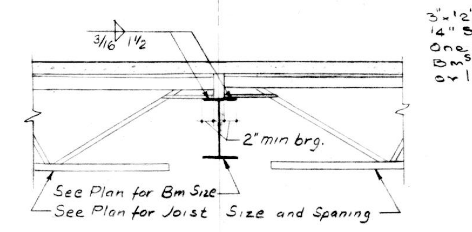

TYPICAL STEEL JOIST BEARING ON STEEL BEAM

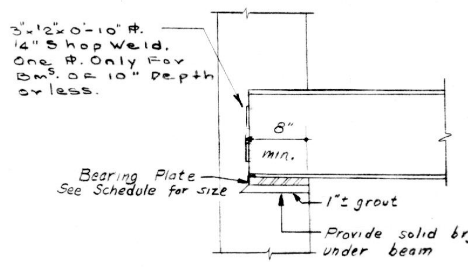

TYPICAL STEEL BEAM BEARING ON WALL

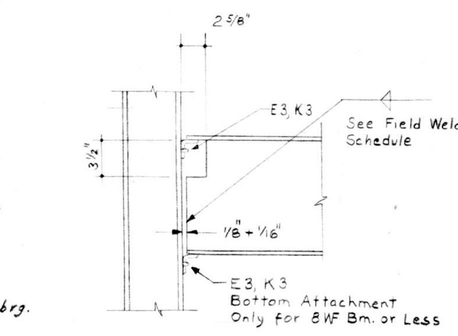

TYPICAL BEAM TO WF COLUMN CONNECTION

FIELD WELD SCHEDULE (SHEAR WELD)

SIZE OF MEMBER	FILLET WELD EACH SIDE OF WEB SIZE	LENGTH	REMARKS
36WF230	5/8	12 1/2	
36WF150	1/2	15 1/2	
33WF130	1/2	15 1/2	
24WF120	1/2	10 1/2	
24WF76	3/8	14 1/2	
21WF112	7/16	9 1/2	
21WF62	3/8	11	
18WF77	7/16	8	
18WF64	3/8	9	
18WF55	5/16	9	
18I54.7	3/8	8 1/2	
16WF88	7/16	7 1/2	
16WF64	3/8	9	
16WF58	3/8	9	
16WF50	5/16	9	
16WF45	5/16	9	
16WF40	1/4	9	
16WF36	1/4	9	
15I42.9	3/8	9	
14WF84	3/8	8	
14WF61	3/8	7 1/2	
14WF53	3/8	7 1/2	
14WF48	5/16	7	
14WF43	5/16	6 1/2	
14WF38	5/16	6 1/2	
14WF34	1/4	7	
14WF30	1/4	7	
12WF79	7/16	8	
12WF65	3/8	8	
12WF58	3/8	8	

FIELD WELD SCHEDULE (SHEAR WELD)

SIZE OF MEMBER	FILLET WELD EACH SIDE OF WEB SIZE	LENGTH	REMARKS
12WF50	5/16	7 1/2	
12WF45	5/16	7 1/2	
12WF40	5/16	7	
12WF36	1/4	7	
12WF31	1/4	7	
12WF27	1/4	7	
12I40.8	3/8	6 1/2	
12I31.8	5/16	6 1/2	
12B22	1/4	9	
12B19	1/4	8 3/4	
12B16.5	1/4	8 3/4	
12B14	1/4	8 3/4	Joist
10WF77	1/2	7	
10WF54	5/16	7 1/2	
10WF45	5/16	7	
10WF33	1/4	7 1/2	
10WF29	1/4	7	
10WF25	1/4	7 1/2	
10WF21	1/4	7 1/2	
10B15	1/4	6 3/4	
8WF28	1/4	5 1/2	
8WF24	1/4	5 1/2	
8B13	1/4	4 3/4	
8B10	1/4	4 3/4	Joist
6B12	1/4	2 3/4	
12⊔30	3/8	7 1/2	
10⊔25	1/4	7	

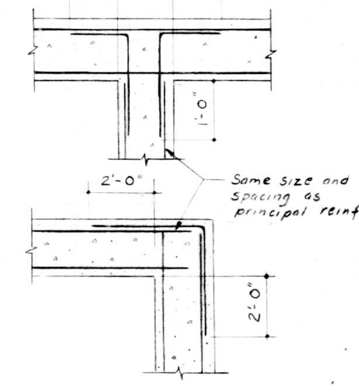

TYPICAL CORNER BARS IN CONCRETE WALLS.

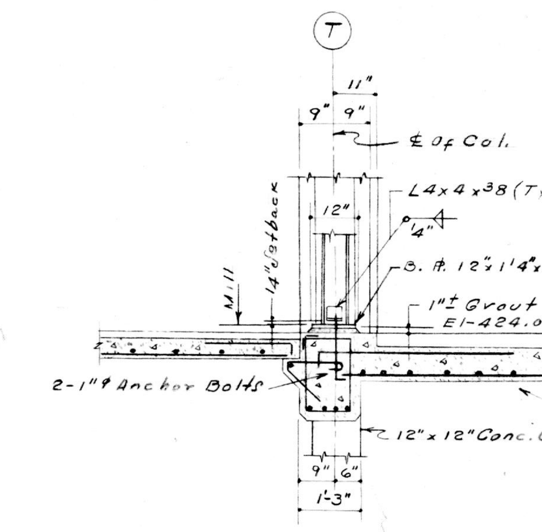

COLUMN DETAIL BETWEEN GYMNASIUM AND CORRIDOR

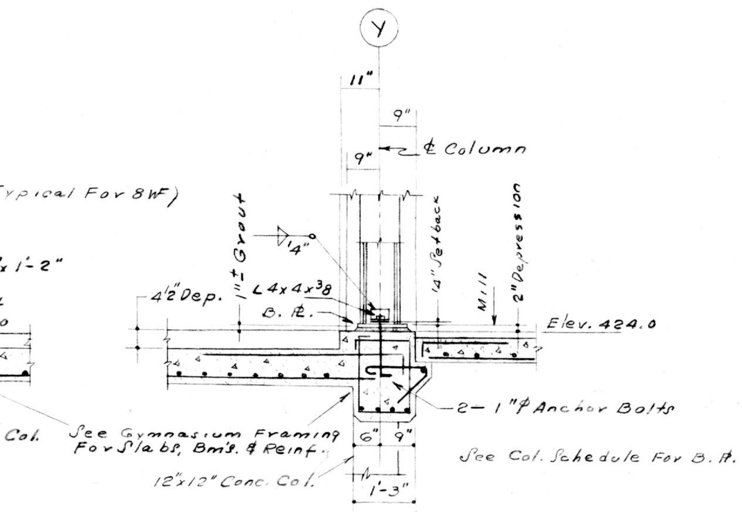

COLUMN DETAIL BETWEEN GYMNASIUM AND SWIMING POOL

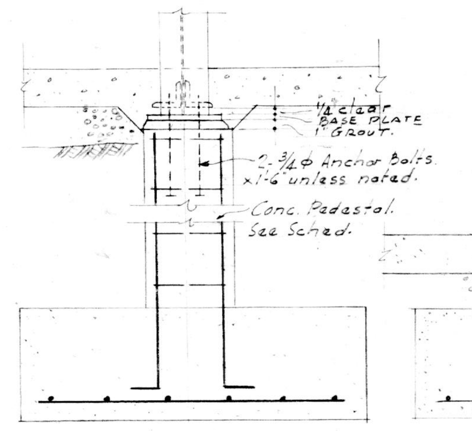

DETAIL - STEEL COLUMN ON CONCRETE PEDESTAL

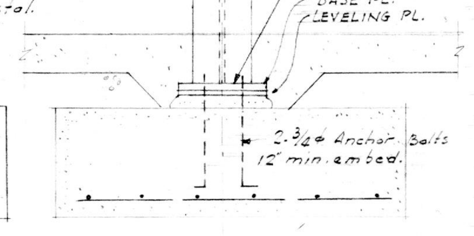

DETAIL - STEEL COLUMN ON CONCRETE FOOTING

COL. BASE DETAIL NOTES: For 6" Col. or smaller provide masonry leveling plate and weld col. directly to base plate. For 8" Col. or larger provide 2 base LS welded to Col. and set Col. on grouted base plate.

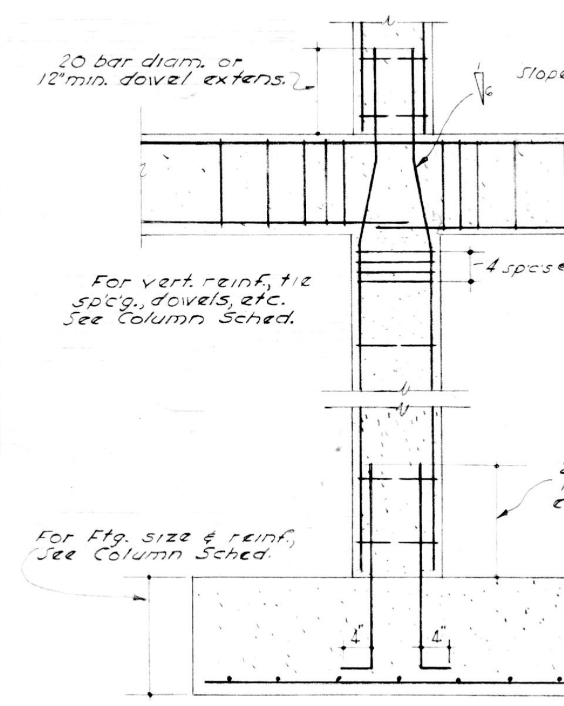

TYPICAL CONCRETE COLUMN & FOOTING DET.

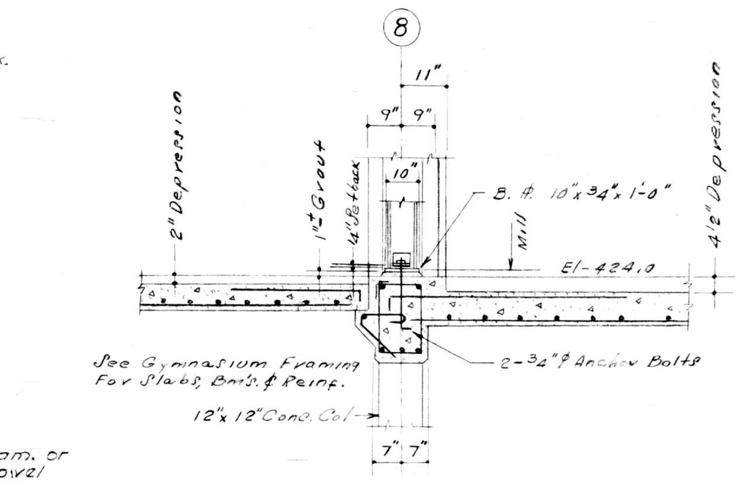

COLUMN DETAIL AT NORTH END OF GYMNASIUM

COLUMN SCHEDULE

Column No's	F14	G14 H14	E14	E12 E11 E10	E9	E7	F13 F12 F11	F10	F9	G13	G12 G11 G10	G9	F8	G8	H8	F7 G7 H7	E2 E3 E4 E5 E6	E1 H1	C5	C1 C2 C3 C4 C6	H2 H3 H4 H5 H6	C1	C7
Auditorium Roof Elev. 452.67																							
Gymnasium Roof Elev. 449.00																							
Chapel Roof, Student Dining, Foyer Roof, East Classroom Roof Elev. 445.12	17	22	15.2	27.2	46.8	41.6	32	23.7	56	35	27.8	78				52.8	50	44	15	15	52	8	7.5
Vocal Music Roof, Swimming Pool Roof Elev. 436.00																							
Projection Room Elev. 435.33																							
Library Roof, Canopy Roof Elev. 434.75	6 WF 15.5	Do	4"x4"x3/16" Tube	4"x4"x3/8" Tube	5x5x3/8 Tubular Col.	8 WF 31	8WF 24	Do	8 WF 28	Do	8 WF 24	8 WF 35				8 WF 24	Do	8 WF 28	8 WF 31	Do	8 WF 24	8 WF 31	8 WF 31
Priest Suite Floor, Multi-Purpose Floor Elev. 434.50	23.8	29.5	16	36	50	40	47.6	39.7	49	42.6	26.2	48.9	50.2	43.4	54.8	41.5	7.8 45	6	9	46	11.6	23	28
West Classroom Roof, Adm. Roof, Storage Roof, East Wing Upper Floor Elev. 434.46																							
Dance Room Floor Elev 434.29													6 WF 25	6 WF 15.5	6 WF 15.5								
Vocal Music Floor, Gymnasium Floor, East Wing Main Floor Elev. 424.00																							
West Wing Main Floor Elev. 423.79																							
West Wing Lower Fl., Student Lounge Floor, Locker Room Floor Elev. 413.33																							
Boiler Room Floor Elev																							
Top of Base ℘.	423.51	423.51	423.51	423.55	423.60	423.51	423.51	423.49	423.51	423.51	423.49	423.51	423.51	423.51	423.51	423.51	423.49	423.53	423.49	423.49 423.08 (C3 only)	423.49	423.47	423.47
Size of Base ℘.	10"x1" x0'-9"	10"x1" x0'-9"	5"x1" x0'-10"	6"x1 1/2" x1'-0"	8"x2" x1'-4"	12"x1 1/4" x0'-10"	12"x1 1/4" x1'-0"	12"x1" x0'-10"	14"x1 1/4" x1'-2"	12"x1 1/4" x1'-0"	10"x1" x0'-10"	14"x1 1/4" x1'-2"	10"x1" x0'-9"	10"x1" x0'-9"	10"x1" x0'-10"	13"x1 1/4" x1'-0"	10"x1" x0'-9" 11"x1" x1'-0" (E5, E6)	10"x1 1/2" x1'-0"	9"x1" x0'-10"	10"x1" x0'-10	10"x1" x0'-10"	9"x3/4" x0'-9"	9"x3/4" x0'-9"
Size of Level ℘.	10"x1/4" x0'-9"	10"x1/4" x0'-9"	5"x1/4" x0'-10"	6"x1/4" x1'-0"	8"x1/4" x1'-4"								10"x1/4" x0'-10"	10"x1/4" x0'-10"	10"x1/4" x0'-10"								
Footing Size & Bars E.W.	4-6x4-6 x1-2 10-#5	4-6x4-6 x1-2 10-#5		3-6x3-6 x1-0 10-#4	4-6x4-6 x1-2 10-#5	4-0x4-0 x1-1 12-#4	4-0x4-0 x1-1 12-#4	3-6x3-6 x1-0 10-#4	5-0x5-0 x1-3 11-#5	4-0x4-0 x1-1 12-#4	3-6x3-6 x1-0 11-#4	5-0x5-0 x1-3 11-#5	3-6x3-6 x1-0 10-#4	3-6x3-6 x1-0 10-#4	3-6x3-6 x1-0 10-#4	4-6x4-6 x1-2 10-#5	4-6x4-6 x1-2 10-#5	4-6x4-6 x1-2 10-#5		4-6x4-6 x1-2 10-#5	3-6x3-6 x1-0 10-#4		3-0x3-0 x1-0 8-#4
Top of Footing			Ped 12x16 4-#7	Ped 12x16 4-#7	Ped 12x24 6-#7												Ped. 12x12 4-#6 E2,3,4 only	Ped. 12x16 4-#7	Ped 12x16 4-#7	Ped. 12x12 4-#6	Ped 12x12 4-#6	Ped. 12x12 4-#7	

COLUMN SCHEDULE

Column No's.	U12, U10, U9, V12, V10, V9, X12, X10, X9	T14, U14, V14, X14, Y14	U13, V13, X13	Y13, Y12, Y10, Y9	Y8	T13, T12, T10, T9	T8	U8, V8, X8	Z9, Z10, Z12	VV12A, Z12A	Z8	U7, W7, W6	S7	T7	Z7	X7	Z5, Z4	X5	X4	X3	VV4, VV5	VV3	Z3	VV7	VV8	VV13	VV14
Elev. 424.0	87	69	110	201	119	174	147	157	70	12	40	26	115	120	53	93	61	131	169	101	80	65	40	65	39	12	39
Core	14"x14"	10"x12"	12"x12"	12"x14"	12"x12"	12"x14"	12"x12"	12"x14"	12"x12"	12x12	12"x12"	12"x12"	12"x14"	12"x14"	12"x12	12"x12"	12"x12	12"x12"	12x14"	12"x12	10"x12	10"x12"	12"x12"	10"x12"	10"x12"	12"x12"	
Vert. Steel	4-#6	4-#5	4-#8	6-#10	6-#8	6-#10	6-#9	6-#9	4-#6	4-#6	4-#6	4-#6	6-#8	6-#8	4-#6	4-#6	4-#6	4-#10	6-#10	4-#8	4-#6	4-#6	4-#6	4-#6	4-#6	4-#6	
Ties	#3@12"	#3@12"	#3@12	#3@12"	#3@12	#3@12	#3@12	#3@12	#3@12	#3@12	#3@12	#3@12	#3@12	#3@12	#3@12	#3@12	#3@12	#3@12	#3@12	#3@12	#3@12	#3@12	#3@12	#3@12	#3@12	#3@12"	
Elev. 413.33 Core, Vert. Steel, Ties																	do.	do	do	do	do	do	do			do.	39 12x15 6-#5 #3@12"
Elev. 409.33 Boiler Rm. Floor, Mech. Fl. 402.00 Core, Vert. Steel, Ties																											
Dowels	4-#6	4-#5	4-#8	6-#10	6-#8	6-#10	6-#9	6-#9	4-#6	4-#6	4-#6	4-#6	6-#8	6-#8	4-#6	4-#6	4-#6	6-#8	6-#10	4-#8	4-#6	4-#6	4-#6	4-#6	4-#6	4-#6	6-#5
Footing Size	4-6x4-6x1-2 10-#5 E.W.	4-0x4-0x1-0 12-#4 E.W.	5-0x5-0x1-3 11-#5 E.W.	6-6x6-6x1-6 13-#6 E.W.	5-0x5-0x1-3 11-#5 E.W.	6-0x6-0x1-5 11-#6 E.W.	5-6x5-6x1-3 13-#5 E.W.	5-9x5-9x1-4 10-#6 E.W.	4-0x4-0x1-0 12-#4 E.W.	2-6x2-6x1-0 5-#4 E.W.	3-0x3-0x1-0 8-#4 E.W.	2-6x2-6x1-0 5-#4 E.W.	5-0x5-0x1-3 11-#5 E.W.	5-0x5-0x1-3 11-#5 E.W.	3-6x3-6x1-0 11-#4 E.W.	4-6x4-6x1-2 10-#5 E.W.	3-6x3-6x1-0 11-#4 E.W.	5-6x5-6x1-3 13-#5 E.W.	6-0x6-0x1-5 11-#6 E.W.	5-0x5-0x1-3 11-#5 E.W.	4-6x4-6x1-2 10-#5 E.W.	4-0x4-0x1-0 12-#4 E.W.	3-0x3-0x1-0 8-#4 E.W.	4-0x4-0x1-0 12-#4 E.W.	3-0x3-0x1-0 8-#4 E.W.	2-6x2-6x1-0 5-#4 E.W.	3-0x3-0x1-0 8-#4 E.W.

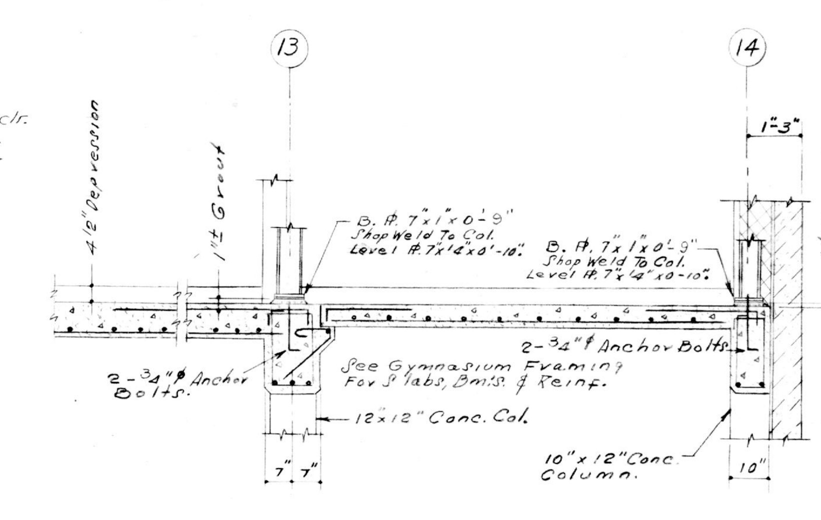

COLUMN DETAIL BETWEEN GYMNASIUM AND CORRECTIVE GYMNASIUM

COLUMN SCHEDULES, BEAM AND SLAB SCHEDULES, FIELD WELD SCHEDULE, SAXE CLIPS AND TYPICAL DETAILS.

NOTRE DAME PREPARATORY SCHOOL

BALTIMORE COUNTY, MARYLAND

UPPER SCHOOL

FOR THE

SCHOOL SISTERS OF NOTRE DAME

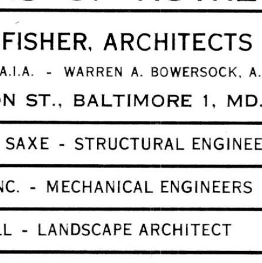

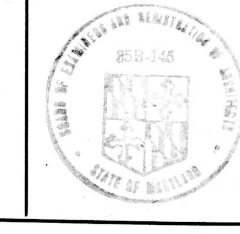

TAYLOR AND FISHER, ARCHITECTS
D. K. ESTE FISHER, JR., F.A.I.A. - WARREN A. BOWERSOCK, A.I.A.
130 W. HAMILTON ST., BALTIMORE 1, MD.
VAN RENSSELAER P. SAXE - STRUCTURAL ENGINEER
HENRY ADAMS, INC. - MECHANICAL ENGINEERS
MARTIN FUNNELL - LANDSCAPE ARCHITECT

JOB NO. 1115
DATE: APRIL 1, 1959
DRAWING NUMBER
S12
OF
THIS PRINT ISSUED:
APR 7 1959